Service

Industrial Generator Sets

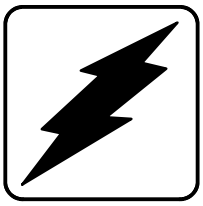

Models:

20-300 kW

KOHLER®
POWER SYSTEMS

TP-5353 8/94c

Table of Contents

Safety Precautions and Instructions

A generator set, like any other electromechanical device, can pose potential dangers to life and limb if improperly maintained or imprudently operated. The best way to prevent accidents is to be aware of the potential dangers and to always use good common sense. In the interest of safety, some general precautions relating to the operation of a generator set follow. Below are some general precautions relating to the operation of a generator set. SAVE THESE INSTRUCTIONS.

DANGER

Danger indicates the presence of a hazard that *will* cause *severe* personal injury, death, or substantial property damage if the danger is ignored.

WARNING

Warning indicates the presence of a hazard that *can* cause *severe* personal injury, death, or substantial property damage if the warning is ignored.

CAUTION

Caution indicates the presence of a hazard that *will* or *can* cause *minor* personal injury or property damage if the caution is ignored.

NOTE

Note communicates installation, operation, or maintenance information that is important but not hazard related.

Safety decals are affixed to the generator set in prominent places to advise the operator or service technician of potential hazards. The decals are reproduced here to improve operator recognition. For a further explanation of decal information, refer to the safety precautions throughout this manual. Before operating or servicing the generator set, be sure you understand the messages of these decals. Replace decals if missing or damaged.

Accidental Starting

WARNING

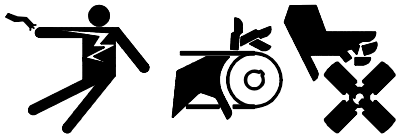

Accidental starting.
Can cause severe injury or death.

Disconnect battery cables before working on generator set (negative lead first and reconnect it last).

Accidental starting can cause severe injury or death. Turn generator set master switch to OFF position, disconnect power to battery charger, and remove battery cables (remove negative lead first and reconnect it last) to disable generator set before working on any equipment connected to generator set. The generator set can be started by automatic transfer switch or remote start/stop switch unless these precautions are followed.

Battery

WARNING

Sulfuric acid in batteries.
Can cause severe injury or death.

Use protective goggles and clothes. Battery acid can cause permanent damage to eyes, burn skin, and eat holes in clothing.

⚠ WARNING

Explosion.
Can cause severe injury or death. Relays in battery charger cause arcs or sparks.

Locate in a well-ventilated area. Keep explosive fumes away.

Sulfuric acid in batteries can cause severe injury or death. Sulfuric acid in battery can cause permanent damage to eyes, burn skin, and eat holes in clothing. Always wear splash-proof safety goggles when working around the battery. If battery electrolyte is splashed in the eyes or on skin, immediately flush the affected area for 15 minutes with large quantities of clean water. Seek immediate medical aid in the case of eye contact. Never add acid to a battery once the battery has been placed in service. This may result in hazardous spattering of electrolyte.

Explosion can cause severe injury or death. Battery gases can cause an explosion. Do not smoke or permit flame or spark to occur near a battery at any time, particularly when it is being charged. Avoid contacting terminals with tools, etc., to prevent burns and sparks that could cause an explosion. Remove wristwatch, rings, and any other jewelry before handling battery. Never connect negative (–) battery cable to positive (+) connection terminal of starter solenoid. Do not test battery condition by shorting terminals together. Sparks could ignite battery gases or fuel vapors. Ventilate any compartment containing batteries to prevent accumulation of explosive gases. To avoid sparks, do not disturb battery charger connections while battery is being changed. Always turn battery charger off before disconnecting battery connections. Remove negative lead first and reconnect it last when disconnecting battery.

Engine Backfire/Flash Fire

⚠ WARNING

Fire.
Can cause severe injury or death.

Do not smoke or permit flame or spark to occur near fuel or fuel system.

A sudden backfire can cause severe injury or death. Do not operate with air cleaner removed.

A flash fire can cause severe injury or death. Do not smoke or permit flame or spark to occur near carburetor, fuel line, fuel filter, fuel pump, or other potential sources of spilled fuel or fuel vapors. Use a suitable container to catch all fuel when removing fuel line or carburetor.

Exhaust System

⚠ WARNING

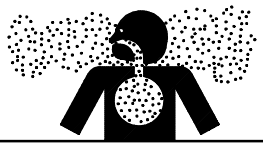

Carbon monoxide.
Can cause severe nausea, fainting, or death.

The exhaust system must be leakproof and routinely inspected.

Carbon monoxide can cause severe nausea, fainting, or death. Never operate the generator set inside a building unless the exhaust gas is piped safely outside. Never operate in any area where exhaust gas could accumulate and seep back inside an occupied building. Avoid breathing exhaust fumes when working on or near the generator set. Carbon monoxide is particularly dangerous because it is an odorless, colorless, tasteless, nonirritating gas. Be aware that it can cause death if inhaled for even a short time.

Carbon monoxide can cause severe nausea, fainting, or death. Carbon monoxide is a poisonous gas which is present in exhaust gases. Carbon monoxide poisoning symptoms include but are not limited to the following:

- Light-headedness, dizziness
- Physical fatigue, weakness in joints and muscles
- Sleepiness, mental fatigue, inability to concentrate or speak clearly, blurred vision
- Stomachache, vomiting, nausea

If any of these symptoms is experienced and carbon monoxide poisoning is possible, affected persons should seek fresh air immediately. They should remain active. They should not be permitted to sit, lie down, or fall asleep. Alert others to the situation. If the condition of affected persons does not improve within minutes of breathing fresh air, they should seek medical attention.

Carbon monoxide can cause severe nausea, fainting, or death. Do not use copper tubing in diesel exhaust systems. Diesel fumes can rapidly destroy copper tubing in diesel exhaust systems. Exhaust sulfur causes rapid deterioration of copper tubing resulting in exhaust leakage.

Fuel System

⚠ WARNING

Explosive fuel vapors.
Can cause severe injury or death.

Use extreme care when handling, storing, and using fuels.

Explosive fuel vapors can cause severe injury or death. All fuels are highly explosive in a vapor state. Use extreme care when handling and storing fuels. Store fuel in a well-ventilated area away from spark-producing equipment and out of the reach of children. Never add fuel to the tank while the engine is running since spilled fuel may ignite on contact with hot parts or from ignition spark. Do not smoke or permit flame or spark to occur near potential sources of spilled fuel or fuel vapors. Keep fuel lines and connections tight and in good condition. Do not replace flexible fuel lines with rigid lines. Flexible sections are used to avoid breakage due to vibration. If any fuel leakage, fuel accumulation, or electrical sparks are noted, DO NOT OPERATE GENERATOR SET. Repair systems before resuming generator set operation

Explosive fuel vapors can cause severe injury or death. Take additional precautions when using the following fuels:

Gasoline—Store gasoline only in approved red containers clearly marked GASOLINE.

Propane (LP)—Adequate ventilation is mandatory. Propane is heavier than air; install gas detectors low in room. Inspect detectors often.

Natural Gas—Adequate ventilation is mandatory. Natural gas rises; install gas detectors high in room. Inspect detectors often.

Explosive fuel vapors can cause severe injury or death. Fuel leakage can cause an explosion. Check LP vapor gas or natural gas fuel system for leakage using a soap-water solution with fuel system test pressurized to 6-8 ounces per square inch (10-14 inches water column). Do not use test solutions that contain ammonia or chlorine, since the soap will not bubble for an accurate leakage test.

Explosive fuel vapors can cause severe injury or death. Storing gasoline and other volatile fuels in day or subbase fuel tanks can cause an explosion. Store only diesel fuel in these tanks.

Explosive fuel vapors can cause severe injury or death. Spilled fuel can cause an explosion. Use a container to catch fuel when draining fuel system. Wipe up all spilled fuel after draining system.

Explosive fuel vapors can cause severe injury or death. Fuel leakage can cause an explosion. Check LP liquid withdrawal gas fuel system for leakage using a soap-water solution with fuel system test pressurized not less than 90 psi (621 kPa). Do not use test solutions that contain ammonia or chlorine, since the soap will not bubble for an accurate leakage test.

Hazardous Noise

⚠ CAUTION

Hazardous noise.
Can cause loss of hearing.

Never operate generator set without a muffler or with a faulty exhaust system.

Hazardous Voltage/ Electrical Shock

⚠ WARNING

Hazardous voltage.

Moving rotor.

Can cause severe injury or death.

Do not operate generator set without all guards and electrical enclosures in place.

⚠ WARNING

Hazardous voltage.
Backfeed to utility system can cause property damage, severe injury, or death.

When generator set is used for standby power, use an automatic transfer switch to prevent inadvertent interconnection of standby and normal sources of supply.

Hazardous voltage can cause severe injury or death. Whenever electricity is present, there is the hazard of electrocution. Open main circuit breaker on all power sources before servicing equipment. Electrically ground the generator set and electrical circuits when in use. Never come into contact with electrical leads or appliances when standing in water or on wet ground, as the chance of electrocution is increased under such conditions.

Hazardous voltage can cause severe injury or death. Disconnect generator set from load by opening line circuit breaker or by disconnecting generator set output leads from transfer switch and heavily taping ends of leads. If high voltage is transferred to load during test, personal injury and equipment damage may result. Do not use the safeguard circuit breaker in place of the line circuit breaker.

Hazardous voltage can cause severe injury or death. Follow instructions of test equipment manufacturer when performing high-voltage test on rotor or stator. An improper test procedure can damage equipment or lead to future generator set failures.

Hazardous voltage can cause severe injury or death. Do not expose the photo transistor board to any external light source, as exposure to light causes high voltage. Keep foreign sources of light away from photo transistor board during testing. Place black electrical tape over LED of circuit board (mounted on generator set end bracket) before starting generator set with end cover removed.

Hazardous voltage can cause severe injury or death. Be sure that foil side of photo transistor board, end of shaft, and threaded holes are clean and free of metal particles and chips. Metal debris may short-circuit photo transistor board and cause hazardous voltage in generator set. AC voltmeter must show correct output before generator set may be reconnected to load.

Hazardous voltage can cause severe injury or death. Make sure leads C and E leading to SCR assembly (one-piece) are connected to the corresponding terminals. Reverse connection of these leads or grounding of the C (red) lead will turn the SCR assembly full-on resulting in hazardous output voltage.

Hazardous voltage can cause severe injury or death. Electrical shock may occur if battery charger is not electrically grounded. Connect battery charger enclosure to ground of a permanent wiring system. As an alternative, run an equipment grounding conductor with circuit conductors and connect to equipment grounding terminal or lead on battery charger. Perform battery charger installation as prescribed in equipment manual. Install battery charger in compliance with all local codes and ordinances.

Hazardous voltage can cause severe injury or death. Reconnect battery correctly to avoid electrical shock and damage to battery charger and battery(ies). Have a qualified electrician perform installation.

Hazardous voltage can cause severe injury or death. Service day tank Electrical Control Module (ECM) as prescribed in equipment manual. Disconnect power to day tank before servicing. The power is disconnected when the day tank ECM OFF pushbutton is engaged. However, 120 volts AC is still present within the ECM when the POWER ON light is on. Be sure that generator set and day tank are electrically grounded. Do not operate when standing in water or on wet ground as the chance of electrocution is increased under such conditions.

Hazardous voltage can cause severe injury or death. Short circuits can cause bodily injury and/or equipment damage**.** Do not contact electrical connections with tools or jewelry while adjustments are made. Remove wristwatch, rings, and jewelry that can cause short circuits.

Hazardous voltage can cause severe injury or death. Engine block heater can cause electrical shock. Remove engine block heater plug from electrical outlet before working on block heater electrical connections.

Hazardous backfeed voltage can cause severe injury or death. Install a transfer switch in standby power installations to prevent connection of standby and other sources of power. Electrical backfeed into a utility electrical system can cause serious injury or death to utility personnel working on transmission lines.

Heavy Equipment

⚠ WARNING

Unbalanced weight.
Improper lift can cause severe injury or death or equipment damage.

Do not use lifting eyes.
Use lifting bars through holes in skid to lift generator set.

Hot Parts

WARNING

Hot coolant and steam.
Can cause severe injury or death.

Before removing pressure cap, stop generator set and allow it to cool. Then loosen pressure cap to relieve pressure.

WARNING

Hot engine and exhaust system.
Can cause severe injury or death.

Do not work on generator set until it is allowed to cool.

Hot parts can cause severe injury or death. Avoid touching generator set field or exciter armature. Generator set field and exciter armature will become hot if shorted.

Hot coolant can cause severe injury or death. Allow engine to cool and release pressure from cooling system before opening pressure cap. To release pressure, cover the pressure cap with a thick cloth; then slowly turn it counterclockwise to the first stop. Remove cap after pressure has been completely released and the engine has cooled. Check coolant level at tank if generator set is equipped with a coolant recovery tank.

Hot parts can cause severe injury or death. Do not touch hot engine parts. An engine gets hot while running and exhaust system components get extremely hot.

Moving Parts

⚠ WARNING

Hazardous voltage.

Moving rotor.

Can cause severe injury or death.

Do not operate generator set without all guards and electrical enclosures in place.

⚠ WARNING

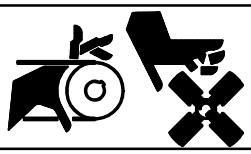

Rotating parts.
Can cause severe injury or death.

Do not operate generator set without all guards, screens, and covers in place.

Exposed moving parts can cause severe injury or death. Keep hands, feet, hair, and clothing away from belts and pulleys when unit is running. Replace guards, covers, and screens before operating generator set.

Notes

NOTICE

This generator set has been rewired from its nameplate voltage to:

246242

NOTE

Affix notice to generator set after reconnecting to a voltage different than the nameplate. Order voltage reconnection decal 246242 from authorized service distributors/dealers.

NOTE

Charge only lead-acid or nickel-cadmium batteries with battery charger.

NOTE

Wipe up all spilled diesel fuel after bleeding system. Wash hands after any contact with fuel oil.

NOTE

Pay special attention to the coolant level. After the coolant has been drained, some time is required before complete refill of the engine water jacket takes place.

NOTE

Engine Damage! Failure to bleed air from cooling system may cause overheating and subsequent damage to engine.

NOTE

Do not turn on block heater before filling cooling system. Run engine until warm and refill radiator to purge air from the system before energizing block heater. Block heater failure occurs if heater element is not immersed in water.

NOTE

Hardware Damage! Engine and generator set may use both American Standard and metric hardware. Use the correct size tools to prevent rounding of bolt heads and nuts.

NOTE

When replacing hardware, do not substitute with inferior grade hardware. Screws and nuts are available in different hardness ratings. American Standard hardware uses a series of markings and metric hardware uses a numeric system to indicate hardness. Check markings on bolt head and nuts for identification.

Introduction

This manual covers the concept, operation, troubleshooting, and repair of 20-300 kW Fast-Response™ II generator sets. Wiring diagram manuals are available separately.

All information in this publication represents data available at time of printing. Kohler Co. reserves the right to change this literature and the products represented without incurring obligation.

Read through this manual and carefully follow all procedures and safety precautions to ensure proper equipment operation and to avoid bodily injury. Read and follow the Safety Precautions and Instructions section at the beginning of this manual. Keep this manual with equipment for future reference.

Equipment service requirements are minimal but are very important to safe and efficient operation; therefore, inspect parts often and perform required service at the prescribed intervals. An authorized service distributor/dealer should perform required service to keep equipment in top condition.

Service Assistance

For sales and service in the U.S.A. and Canada check the yellow pages of the telephone directory under the heading GENERATORS—ELECTRIC for an authorized service distributor/dealer or call 1-800-544-2444.

For sales and service outside the U.S.A. and Canada, contact your local distributor.

For further information or questions, contact the company directly at:

KOHLER CO., Kohler, Wisconsin 53044 U.S.A.
Phone: 920-565-3381
Fax: 920-459-1646 (U.S.A. Sales)
920-459-1614 (International)

Kohler Power Systems
Asia Pacific Headquarters
7 Jurong Pier Road
Singapore 619159
Phone: (65)264-6422, Fax (65)264-6455

To ensure supply of correct parts or information, make note of the following identification numbers in the spaces provided:

GENERATOR SET

MODEL, SPEC, and SERIAL numbers are found on the nameplate attached to the generator set.

Model No. _____

Specification No. _____

Serial No. _____

GENERATOR SET ACCESSORIES

An alternate nameplate inside the junction box identifies factory-installed generator set accessories.

Accessory Nos. _____

_____

_____

_____

_____

_____

_____

_____

_____

ENGINE

The engine serial number is found on the engine nameplate.

Engine Serial No. _____

PART NUMBER AND SERIAL NUMBER

Part and serial numbers are provided on the nameplate attached to the transfer switch.

Part No. _____

Serial No. _____

Section 1. Specifications

Introduction

The spec sheets for each generator set provide specific generator and engine information. Refer to the respective spec sheet for data not supplied in this manual. Consult the generator set operation manual, installation manual, engine operation manual, and engine service manual for additional specifications.

Fast-Response™ II Concepts

The generator excitation system uses a permanent magnet exciter with a silicon controlled rectifier (SCR) Assembly which controls the amount of DC current fed to the generator field. This type of system uses a voltage regulator which signals the SCR assembly through an optical coupling. The voltage regulator monitors engine speed and generator output voltage to turn a stationary light emitting diode (LED) on or off, according to engine speed and output voltage. The LED is mounted on the end bracket opposite a photo transistor board which rotates on the shaft. The photo transistor picks up the signal from the LED and tells the SCR assembly to turn on or off, depending upon the need, as dictated by the voltage regulator. See Figure 1-1.

The voltage recovery period of this type of generator is several times faster than the conventionally wound field brushless generator because it does not have to content with the inductance of the exciter field. It also has better recovery characteristics than the static excited-machine because it is not dependent upon the generator set output voltage for excitation power. Possibly the greatest advantage of this type machine is its inherent ability to support short-circuit current and allow system coordination for tripping downstream branch circuit breakers.

The generator set systems deliver exciter current to the main field within 0.05 seconds of a change in load demand.

Short Circuit Performance

When a short circuit occurs in the load circuit(s) being served, output voltage drops and amperage momentarily rises to 600-1000% of the generator set's rated current until the short is removed. The SCR assembly sends full exciter power to the main field. The generator then sustains up to 300% of its rated current. Sustained high current will cause correspondingly rated load circuit fuses/breakers to trip. The safeguard breaker kit serves to collapse the generator set's main field in the event of a sustained heavy overload or short circuit.

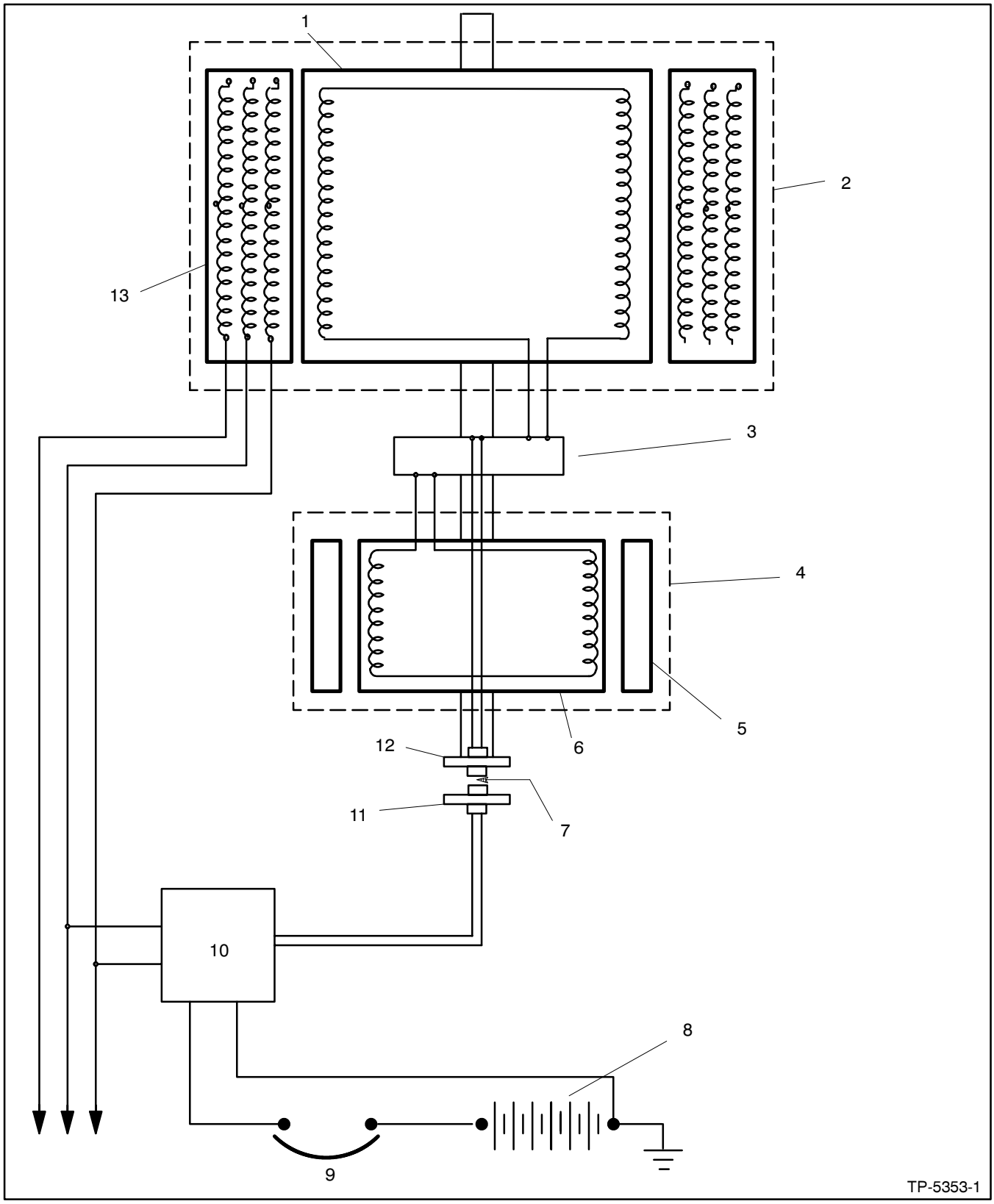

1. Field
2. Main Generator
3. SCR Assembly
4. Exciter Generator
5. Exciter Field Magnets
6. Exciter Armature
7. Optical Coupling
8. Starting Battery
9. Safegaurd Breaker (Optional)
10. AC Voltage Regulator
11. LED Board
12. Photo Transistor Board
13. Stator

Figure 1-1. Alternator Schematic

Specifications

The generator set is a rotating-field generator with a smaller rotating-armature generator turned by a common shaft. The main rotating-field generator supplies current to load circuits while the rotating-armature (exciter) generator supplies DC to excite the main generator's field.

Generator

Component Specification	Model	Value
Controller and battery electrical system	20-180 kW	12 volts DC
Controller and battery electrical system	200-300 kW	24 volts DC
Generator field resistance (F+/ F–)	20-60 kW	2.0-2.9 ohms
Generator field resistance (F+/ F–)	80-150 kW	1.8-2.2 ohms
Generator field resistance (F+/ F–)	180-300 kW	1.0-1.5 ohms
Exciter armature resistance	20-30 kW (24 pole)	0.19 ohms
Exciter armature resistance	40-60 kW (24 pole)	0.13 ohms
Exciter armature resistance	80-150 kW (16 pole)	0.27 ohms
Exiter armature resistance	80-150 kW (24 pole) (early models)	0.13 ohms
Exciter armature resistance	180-300 kW (16 pole)	0.26 ohms
Exiter armature resistance	180-300 kW (24 pole) (early models)	0.11 ohms
SCR assembly terminal nut torque (20-150 kW)		8 in. lbs. (0.9 Nm)
SCR assembly mounting bolt torque		8 in. lbs. (0.9 Nm)
End bracket to stator bolt torque		35 ft. lbs. (47 Nm)
End bracket to bearing outer race clearance		0.25 in. (6.35 mm)
Fan to rotor flange torque		260 in. lbs. (29 Nm)
Drive disks to rotor shaft torque		50 ft. lbs. (68 Nm)
Speed sensor air gap	20-300 kW	0.014-0.028 in. (0.36-0.71 mm)
Speed sensor voltage	20-300 kW	2 (black) & 16 (white) 3-6 volts DC 2 (black) & 24 (red) 8-10 volts DC
Electronic governor magnetic pickup air gap Magnetic pickup output voltage during cranking	20-180 kW	0.014-0.028 in. (0.36-0.71 mm) 2.5 volts AC minimum
Electronic governor magnetic pickup air gap Magnetic pickup output voltage during cranking	200-300 kW	1/4 turn out (cold) 2.5 volts AC minimum
Generator adapter to flywheel housing bolt torque		see chart following
Drive disks to flywheel torque		see chart following

Generator Adapter to Flywheel Housing Bolt Torque

Models	Hardware Type	Torque—ft. lbs. (Nm)
20/30 kW Ford Powered *	3/8-16 grade 5	28 (38)
33-45 kW Ford Powered *	3/8-16 grade 8	35 (47)
50-100 kW Ford Powered *	7/16-14 grade 5	44 (60)
20-60 kW John Deere Powered	3/8-16 grade 8	35 (47)
80-150 kW John Deere Powered	3/8-16 grade 8	39 (53)
150 kW (Oversize Generator) John Deere Powered	7/16-14 grade 5	44 (60)
180 kW John Deere Powered	7/16-14 grade 5	44 (60)
20-60 kW Detroit Diesel Powered	3/8-16 grade 8	35 (47)
80/100 kW Detroit Diesel Powered	M10-1.5 class 8.8/9.8	27 (37)
125-180 kW Detroit Diesel Powered	3/8-16 grade 8	39 (53)
200-300 kW Detroit Diesel Powered	7/16-14 grade 5	44 (60)

* Generator adapter mounts to engine (flywheel housing) mounting boss

Drive Discs to Flywheel Torque

Models	Hardware Type	Torque—ft. lbs. (Nm)	Hardware Sequence
20/30 kW Ford Powered	3/8-16 grade 8 stud	39 (53)	1
33-45 kW Ford Powered	3/8-16 grade 8 bolt	39 (53)	2
50-100 kW Ford Powered	3/8-16 grade 8 stud	39 (53)	3
20-60 kW John Deere Powered	3/8-16 grade 8 stud	39 (53)	1
80-100 kW John Deere Powered	3/8-16 grade 5 stud	39 (53)	1
150 kW (Oversize Generator) John Deere Powered (above serial no. 285000)	1/2-13 grade 8 stud	96 (130)	1
150 kW (Oversize Generator) John Deere Powered (below serial no. 285000)	1/2-13 grade 5 stud	64 (87)	1
180 kW John Deere Powered	1/2-13 grade 8 bolt	96 (130)	2
20-60 kW Detroit Diesel Powered	3/8-24 grade 8 stud	39 (53)	1
80/100 kW Detroit Diesel Powered	3/8-24 grade 8 stud	39 (53)	1
125-180 kW Detroit Diesel Powered	3/8-16 grade 5 stud	39 (53)	1
200-300 kW Detroit Diesel Powered	1/2-13 grade 8 bolt	96 (130)	2
200-300 kW Detroit Diesel Powered	1/2-13 grade 8 stud	96 (130)	1

Hardware Sequence
1) Stud/spacer (after drive disc)/hardened washer/nut
2) Hardened washer/bolt
3) Stud/spacer (before drive disc)/hardened washer/nut

Engine

Turbocharger Specifications (30, 80, and 100 kW Ford Powered)	Specification
Turbocharger Axial End Play	0.0043 in. (0.11 mm)
Turbocharger Radial Play	0.0075 in. (0.19 mm)

Engine Prealarm and Shutdown Switches	Specification
Anticipatory High Engine Temperature Switch	
20/30 kW (before serial no. 329000) Ford Powered	198°-212°F (92° -100°C)
20-45 kW (after serial no. 329000) Ford Powered	211°-225°F (99° -107°C)
50-100 kW Ford Powered	211°-225°F (99°-107°C)
20-180 kW John Deere Powered	198°-212° F (92-100° C)
20-180 kW Detroit Diesel Powered	198°-212°F (92°-100°C)
200-300 kW Detroit Diesel Powered	198°-212°F (92°-100°C)
Anticipatory Low Oil Pressure Switch	
20-70 kW Ford Powered	18-22 psi (124-152 kPa)
80/100 kW Ford Powered	36-40 psi (248-276 kPa)
20-180 kW John Deere Powered	18-22 psi (124-152 kPa)
20-60 kW Detroit Diesel Powered	18-22 psi (124-152 kPa)
80/100 kW Detroit Diesel Powered	18-22 psi (124-152 kPa)
125-180 kW Detroit Diesel Powered	18-22 psi (124-152 kPa)
200-300 kW Detroit Diesel Powered	23-27 psi (159-186 kPa)
Low Water Temperature Switch	
20-100 kW Ford Powered	55°-65°F (13°-18°C)
20-180 kW John Deere Powered	55°-65° F (13-18° C)
20-180 kW Detroit Diesel Powered	55°-65°F (13°-18°C)
200-300 kW Detroit Diesel Powered	55°-65°F (13°-18°C)
High Engine Temperature Shutdown Switch	
20 kW (before serial no. 329000) Ford Powered	211°-225°F (99°-107°C)
20-100 kW Ford Powered	218°-238°F (103°-111°C)
20-180 kW John Deere Powered	211°-225°F (99°-107°C)
20-60 kW Detroit Diesel Powered	211°-225°F (99°-107°C)
80/100 kW Detroit Diesel Powered	218°-232°F (103°-111°C)
125-180 kW Detroit Diesel Powered	211°-225°F (99°-107°C)
200-300 kW Detroit Diesel Powered	211°-225°F (99°-107°C)
Low Oil Pressure Shutdown Switch	
20-70 kW Ford Powered	11.5-18.5 psi (79-128 kPa)
80/100 kW Ford Powered	32-36 psi (211-248 kPa)
20-180 kW John Deere Powered	11.5-18.5 psi (79-128 kPa)
20-60 kW Detroit Diesel Powered	11.5-18.5 psi (79-128 kPa)
80/100 kW Detroit Diesel Powered	5.5-10.5 psi (38-72 kPa)
125-180 kW Detroit Diesel Powered	11.5-18.5 psi (79-128 kPa)
200-300 kW Detroit Diesel Powered	11.5-18.5 psi (79-128 kPa)

Controller Gauge Senders	Specification
Oil Pressure Sender	**(in ohms)**
0 psi (0 kPa)	227-257
25 psi (172 kPa)	138-162
50 psi (345 kPa)	92-114
75 psi (517 kPa)	50-80
100 psi (690 kPa)	21-50
Water Temperature Sender	**(in ohms ±10%)**
100° F (38° C)	450
160° F (71° C)	130
220° F (104° C)	47

Accessories

Several accessories are available to finalize the installation, add convenience to operation and service, and to comply with state and local codes. Accessories vary with each generator set model and controller. Accessories are offered factory installed and/or shipped loose. Some accessories are available only with microprocessors controllers. Obtain all the most current information by contacting your local authorized service distributor/dealer. Several accessories available at the time of print of this publication are as follows.

Remote Annunciator Kit (with microprocessor controller only)

A remote annunciator allows convenient monitoring of the set's condition from a location remote from the generator. See Figure 1-2 and Figure 1-3. Remote annunciator includes alarm horn, alarm silence switch, lamp test, and the same lamp indicators (except air damper and auxiliary prealarm) as the microprocessor controller, plus the following:

Line Power. Lamp lights when using commercial utility power.

Generator Power. Lamp lights when using generator power.

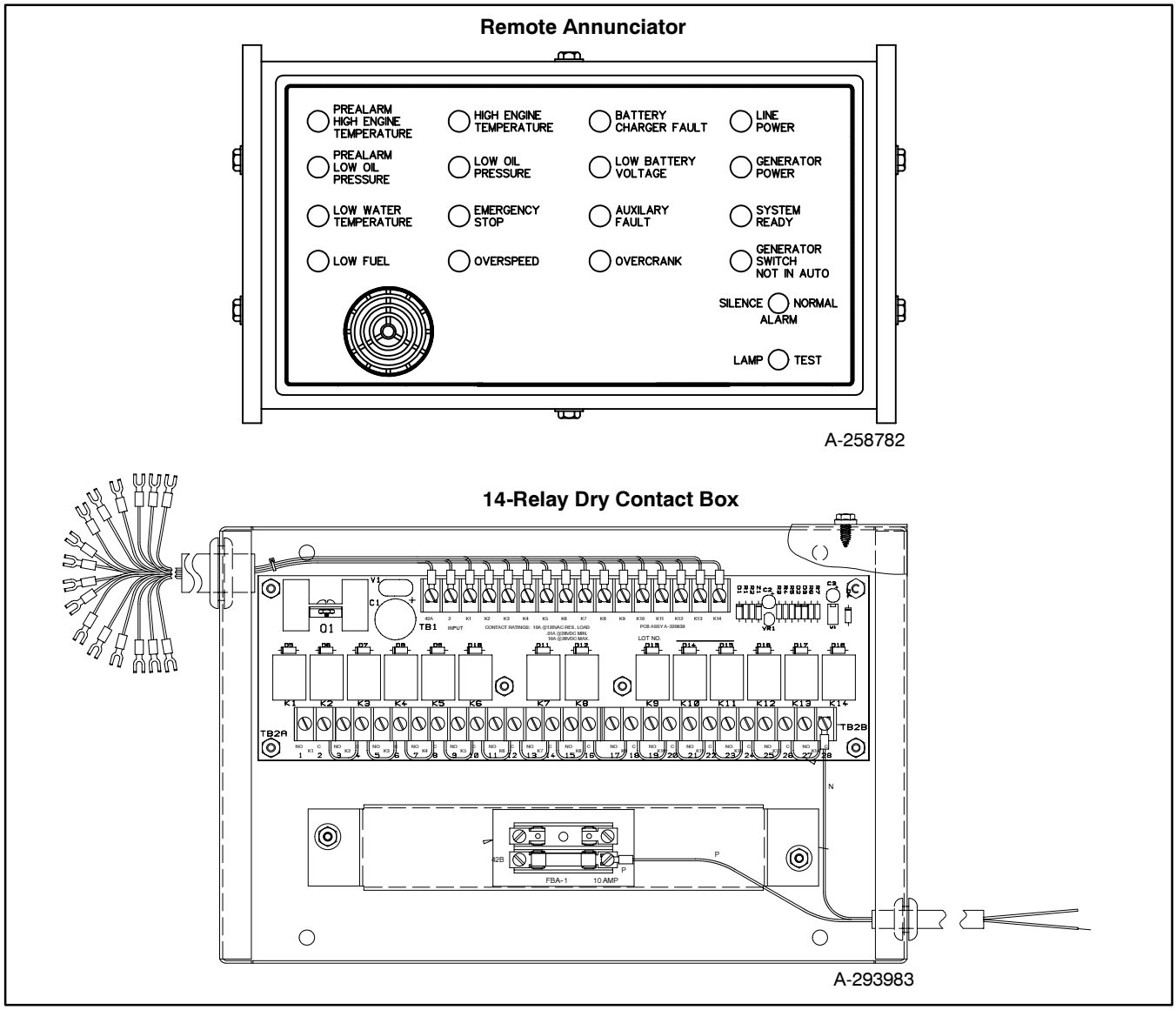

Figure 1-2. Remote Annunciator with 14-Relay Dry Contact Kit

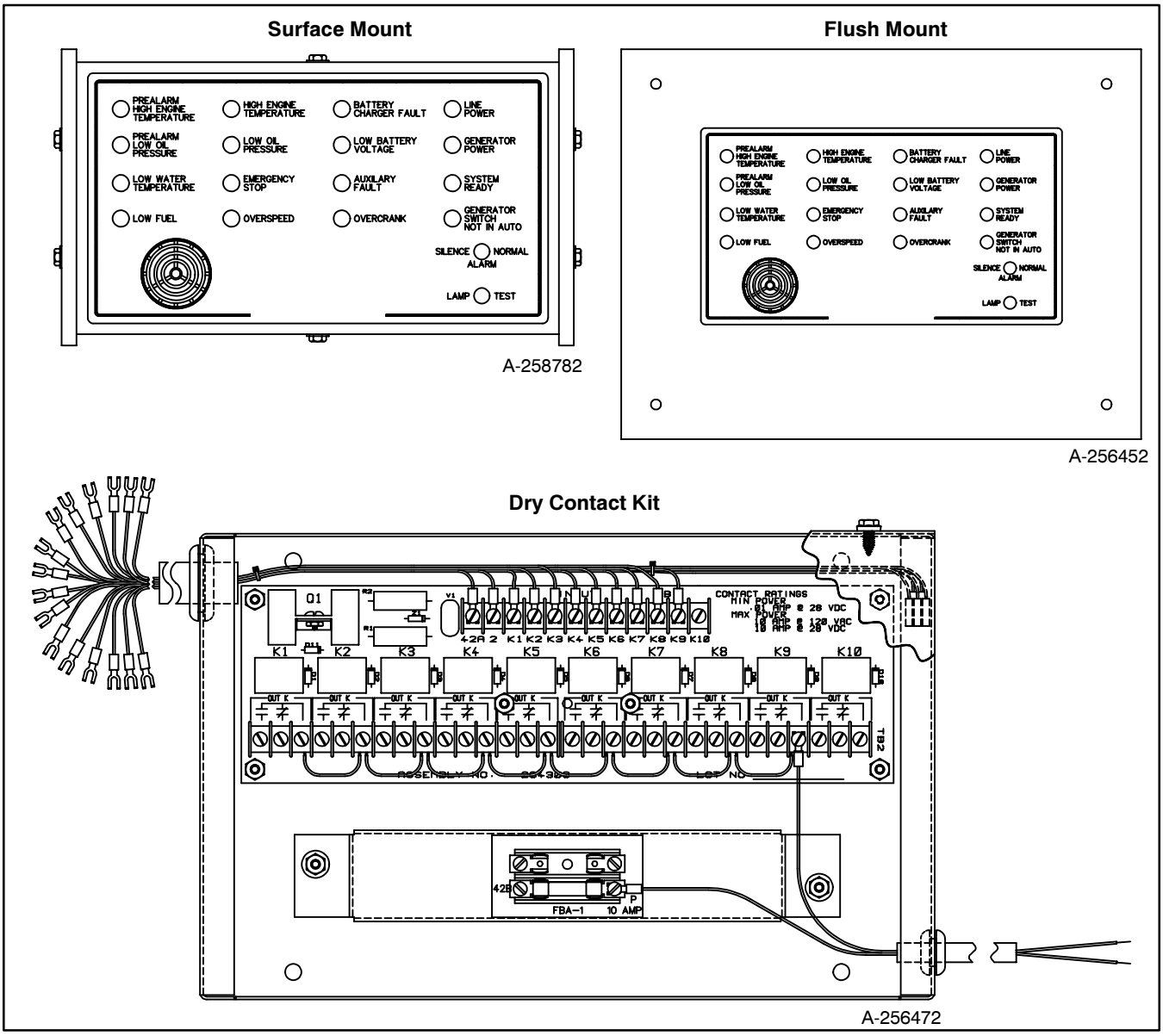

Figure 1-3. Remote Annunciator with 10-Relay Dry Contact Kit

Audio/Visual (A/V) Alarm (with microprocessor controller only)

An A/V alarm warns the operator of fault shutdowns and prealarm conditions (except battery charger fault and low battery voltage) from a location remote from the generator. A/V alarms include alarm horn, alarm silence switch, and common fault lamp. See Figure 1-4.

NOTE

Use the audio/visual alarm with a dry contact kit.

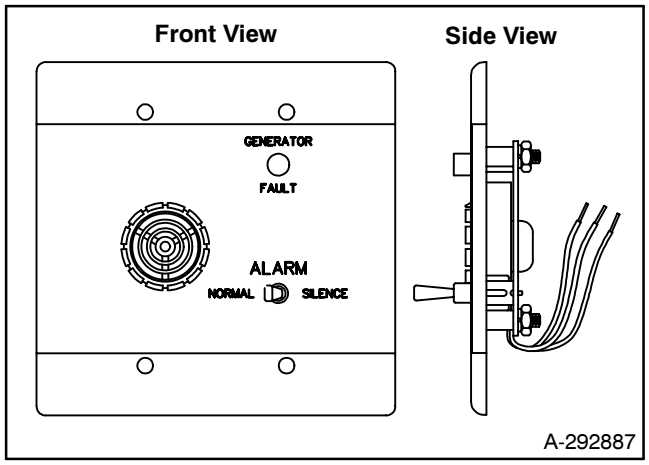

Figure 1-4. Audio/Visual Alarm

Ten-Relay Dry Contact Kit (with microprocessor controller only)

The ten-relay dry contact kit allows monitoring of the standby system and/or the ability to activate accessories such as derangement panels. The kit includes ten sets of relay contacts for connection of customer-provided devices to desired generator functions. Warning devices (lamp and/or audible alarms) and other accessories are typically connected to controller outputs listed. A total of three dry contact kits may be connected to a specific output on the controller. An internal view of the contact kit is shown in Figure 1-5. Typical contact kit output connections include:

- Overspeed
- Overcrank
- High Engine Temperature
- Low Oil Pressure
- Low Water Temperature
- Auxiliary Fault
- Air Damper (if equipped)
- Anticipatory High Engine Temperature
- Anticipatory Low Oil Pressure
- Emergency Stop

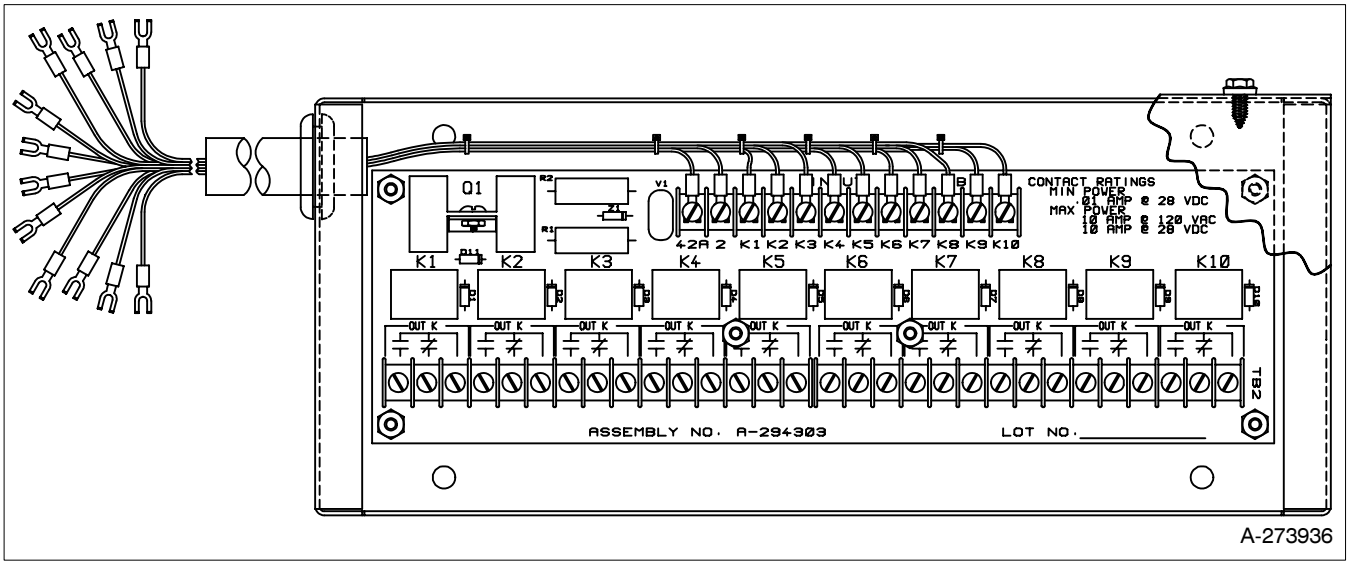

Figure 1-5. Ten-Relay Dry Contact Kit

Single-Relay Dry Contact Kit (with microprocessor controller only)

The single-relay dry contact kit uses one set of contacts to trigger customer-provided warning devices if a fault condition occurs. While any controller fault output (from TB1 terminal strip) can be connected to the single-relay kit, this accessory is typically used to signal an overspeed condition. A total of three dry contact kits may be connected to a specific output on the controller. Figure 1-6 shows the single-relay dry contact kit.

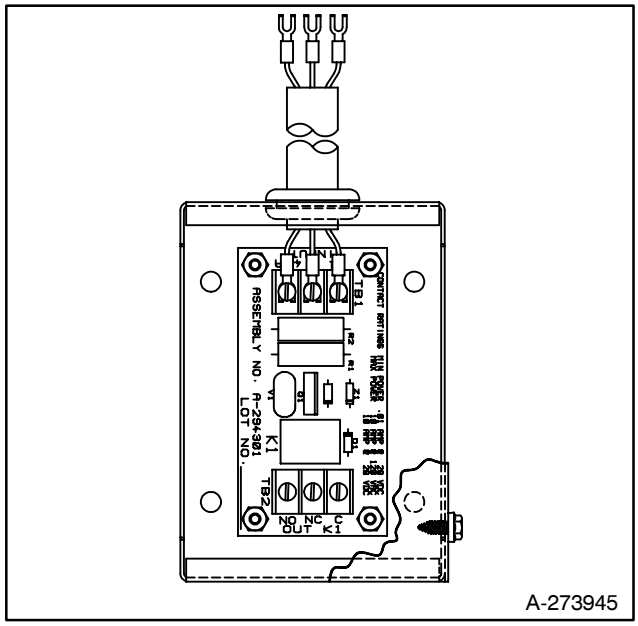

Figure 1-6. Single-Relay Dry Contact Kit

Common Fault Relay Kit (with microprocessor controller only)

The common fault relay kit uses one set of relay contacts to trigger customer-provided warning devices if a fault condition occurs. A wiring harness included with the kit links the relay kit with the controller terminal strip or controller connection kit. Refer to the accessory wiring diagram for proper connection of relay kit wiring harness. Although the common fault alarm can be connected to any controller fault output (on TB1 terminal strip), the kit is typically used to signal the following fault conditions:

- Emergency Stop
- Auxiliary
- Overspeed
- Low Oil Pressure
- High Engine Temperature

Safeguard Breaker

The safeguard breaker senses output current on each generator phase and will shut off the AC voltage regulator in the event of a sustained overload or short circuit. It is not a line circuit breaker and will NOT disconnect the generator from the load. See Figure 1-7.

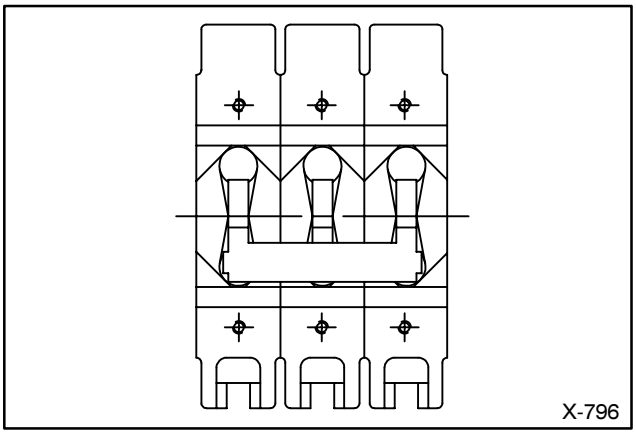

Figure 1-7. Safeguard Breaker

Line Circuit Breaker

The line circuit breaker interrupts generator output in the event of an overload or short circuit. The kit will manually disconnect the generator set from the load when servicing the generator set. See Figure 1-8.

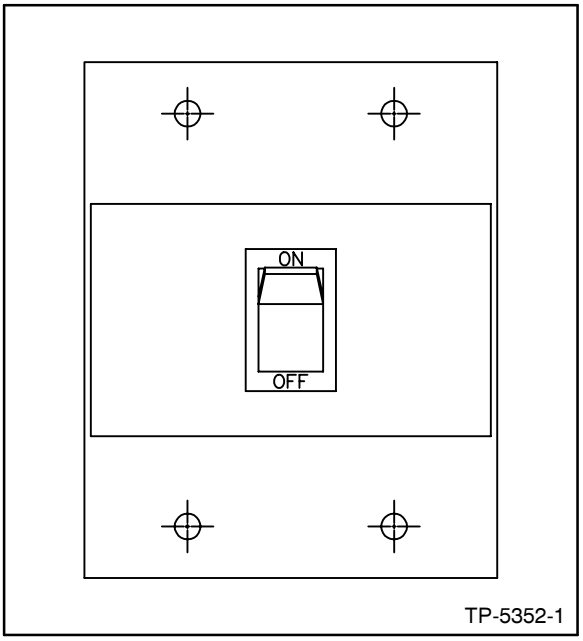

Figure 1-8. Line Circuit Breaker

Overvoltage Kit (with microprocessor controller only)

The microprocessor controller will cause immediate engine shutdown when it is triggered by a DC signal from an overvoltage shutdown option. The generator set will automatically shut down if output voltage is 15% above nominal voltage longer than two seconds. The overvoltage option connects to wire 30 in the controller. See Figure 1-9.

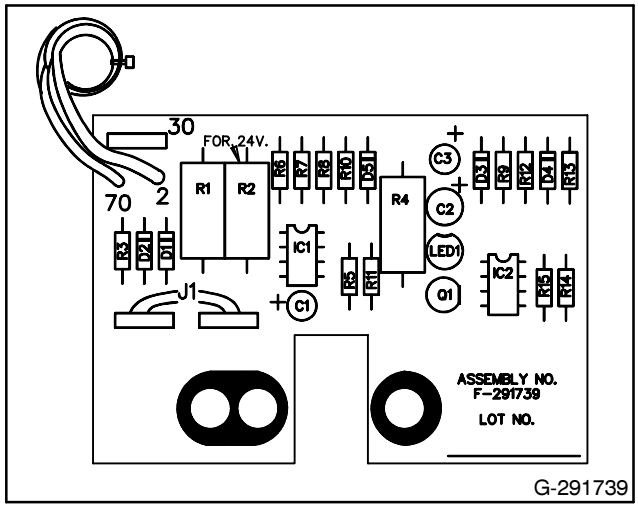

Figure 1-9. Overvoltage Circuit Board

Run Relay Kit

The run relay kit is energized only when the generator set is running. The three sets of contacts in the kit are typically used to control air intake and/or radiator louvers. However, alarms and other signalling devices can also be connected to the contacts. See Figure 1-10.

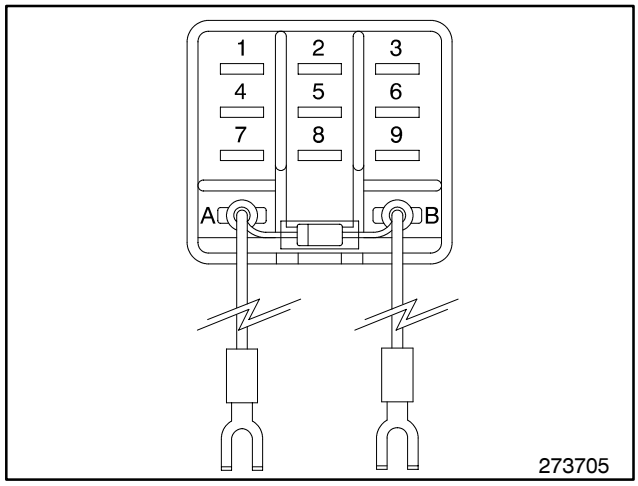

Figure 1-10. Run Relay Kit

Remote Emergency Stop Kit (with microprocessor controller only)

The emergency stop kit allows immediate shutdown of the generator set from a station remote from the generator set. See Figure 1-11. If the emergency stop switch is activated, the emergency stop lamp lights and the unit shuts down. Before attempting to restart the generator set, reset the emergency stop switch (by replacing glass piece) and reset the generator set by placing the master switch in the OFF/RESET position. A single replacement glass piece is located inside the switch. Additional glass pieces are available as a service part. Reset the engine air damper switch on 200-1600 kW models using Detroit Diesel engines. See Section 2, Resetting Emergency Stop Switches.

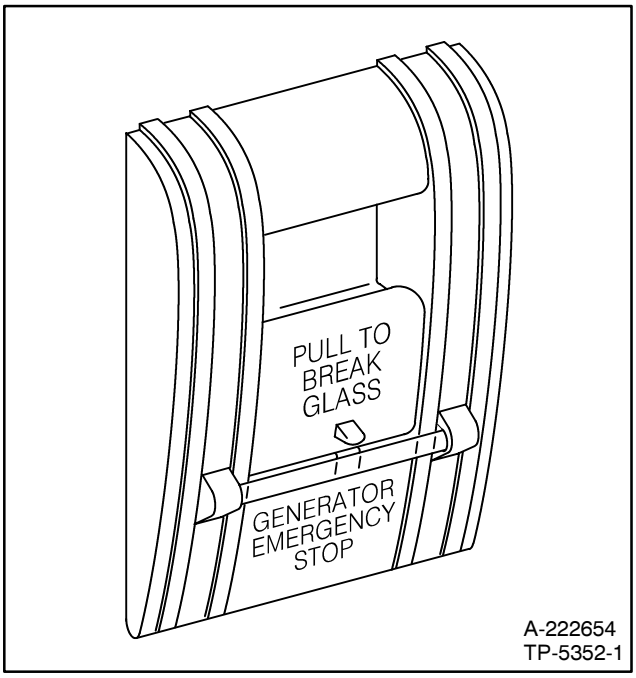

Figure 1-11. Emergency Stop Kit

Controller Connection Kit (with microprocessor controller only)

The controller connection kit allows easy connection of controller accessories without accessing the controller terminal strip. The kit uses a 65-in. (165-cm) wiring harness to link the controller TB1 terminal strip with a remote terminal strip. With the exception of terminals TB1-1, 1A, and 56 the remote terminal strip is identical to that of the controller. Connect all accessories (except the emergency stop kit) to the connection kit terminal strip.

FASTCHECK® Diagnostic Tester (with microprocessor controller only)

The FASTCHECK® diagnostic tester simulates engine operation to identify faults in the controller and engine circuitry. Use the FASTCHECK® when troubleshooting start-up problems or to test and troubleshoot the controller when removed from the generator. Tests are performed without starting the generator set. Functions performed by the FASTCHECK® are listed below; refer to Figure 1-12 to identify LEDs and switches.

LEDs on the FASTCHECK® indicate the energizing of the following circuits:

Engine Ignition (gas/gasoline) or Fuel Solenoid (diesel)
Engine Crank
AC Voltage Regulator
Engine Antidieseling
Battery Connection (correct polarity)
Engine Malfunction Alarm and/or Alarm Shutdown

Switches on the FASTCHECK® simulate:

Engine Cranking
Engine Running
Engine Overspeed
Low Fuel
Low Engine Coolant Temperature
Anticipatory Low Engine Oil Pressure
Anticipatory High Engine Coolant Temperature
Low Engine Oil Pressure
High Engine Coolant Temperature

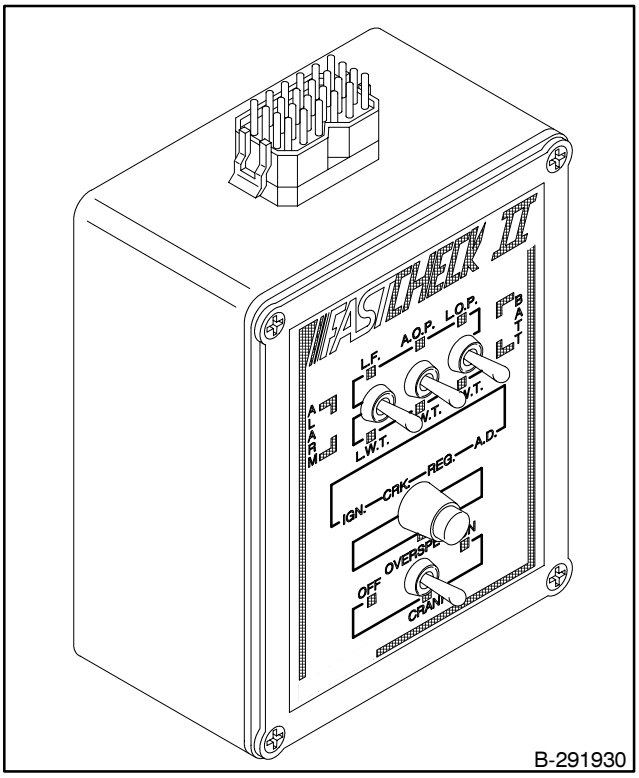

Figure 1-12. FASTCHECK® Diagnostic Tester

Accessory Connection (with microprocessor controller only)

The microprocessor controller circuit board is equipped with a terminal strip (TB1) for easy connection of generator set accessories. Do not direct-connect accessories to the controller terminal strip. Connect all accessories to either a single-relay dry contact kit or ten-relay dry contact kit. Connect the dry contact kit(s) to the controller terminal strip. Connect alarms, battery chargers, remote switches, and other accessories to the dry contact kit relay(s) using 18- or 20-gauge stranded wire.

Lower the controller circuit board panel until it is lying flat when connecting the dry contact kits to the controller TB1 terminal strip. Route dry contact relay leads through the controller grommet and guide loops to the circuit board terminal strip. Place the controller circuit board panel flat to ensure adequate slack in the dry contact relay leads. For specific information on accessory connections refer to Figure 1-13, the accessory wiring diagram, and the instruction sheet accompanying each kit.

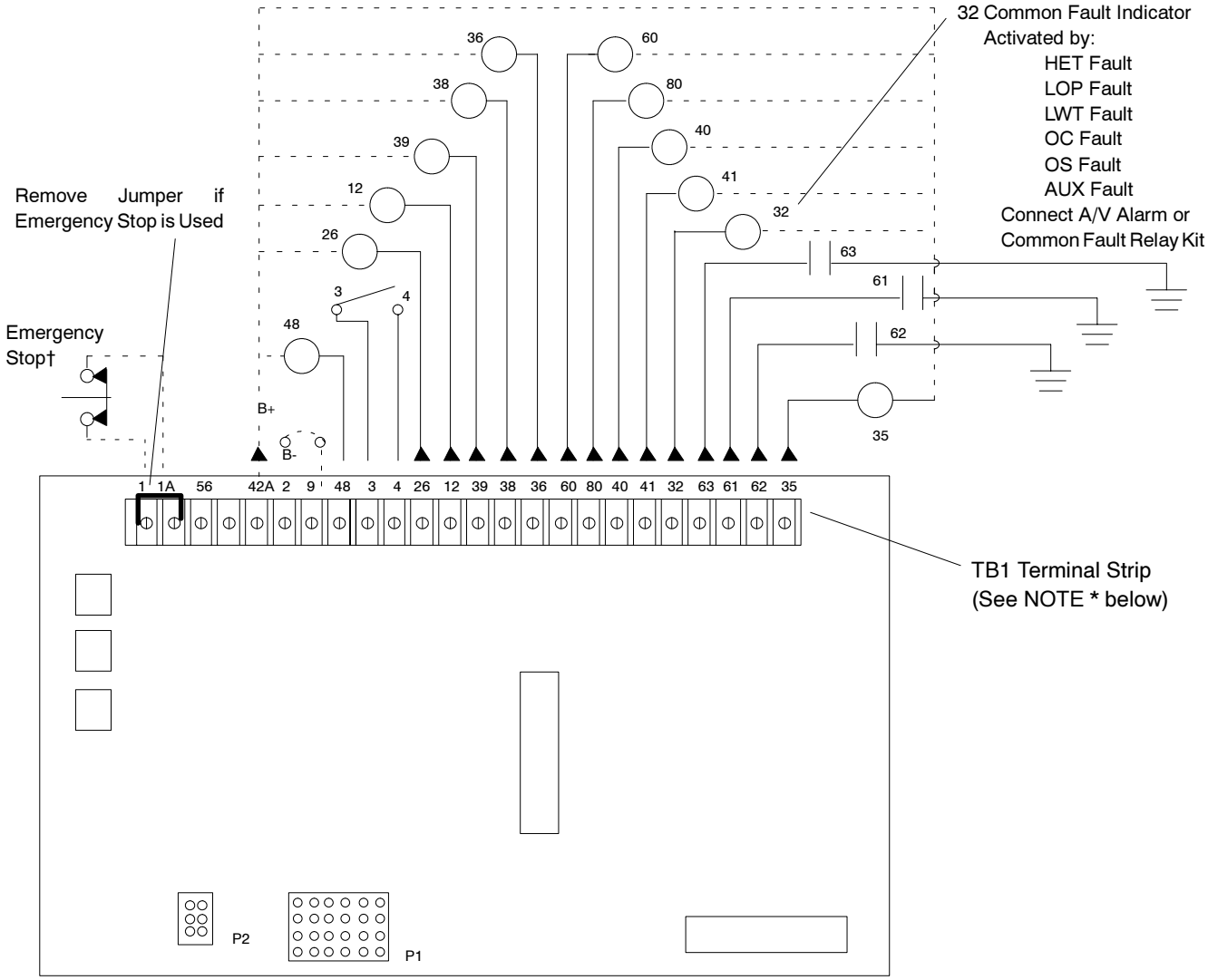

CIRCUIT BOARD TERMINAL IDENTIFICATION (TB1)

1 - Ground—Emergency Stop Relay (K4)—Connect emergency stop across terminals TB1-1 and 1A
1A - Emergency Stop Relay (K4) Coil; Negative—Connect emergency stop across terminals TB1-1 and 1A
56 - Not Used
- Not Used
42A - Battery Voltage (Fuse #1 Protected)—Accessory Power Supply; Customer may also provide separate accessory power source
2 - Ground Terminal
9 - Crank Mode Selection (open—cyclic crank; ground—continuous crank). Connect TB1-2 to TB1-9 for continuous cranking; Leave TB1-9 open for cyclic cranking—see Starting.
48 - Emergency Stop Signal *
3 - Remote Start Ground—Connect remote start switch to TB1-3 and TB1-4
4 - Remote Start—Connect remote start switch to TB1-3 and TB1-4
26 - Auxiliary Signal *
12 - Overcrank Signal *
39 - Overspeed Signal *
38 - Low Oil Pressure Signal *
36 - High Engine Temperature Signal *
60 - System Ready Signal *
80 - Not In Auto Signal *
40 - Anticipatory High Engine Temperature Signal *
41 - Anticipatory Low Oil Pressure Signal *
32 - Common Fault/Prealarm Line—A/V alarm or common fault relay activated by HET, LOP, LWT, OC, OS, and AUX Faults
63 - Low Fuel—Connect fuel level sensor to TB1-63 to activate fault lamp (if used)
61 - Battery Charger Fault—Connect battery charger to TB1-61 to activate fault lamp (if used)
62 - Low Battery Volts—Connect battery charger to TB1-62 to activate fault lamp (if used)
35 - Low Water Temperature Signal

NOTE: Not all terminals are used for all generator sets (see appropriate wiring diagrams for specific generator set model)

† Normally closed contacts

* Use a remote annunciator and/or A/V alarm kit as an indicator with a dry contact kit connected to controller terminal strip TB1

TP-5352-1

Figure 1-13. Controller TB1 Terminal Strip Connection

Section 2. Operation

Prestart Checklist

Check the following items before each startup of manually controlled generator sets and at regular intervals on sets equipped with automatic transfer switches. See your engine operation/maintenance manual for specific service procedures.

Oil Level. Keep the oil level at or near the full mark on dipstick but not over. Keep the oil level in the governor (if applicable) is at or near the full level.

Fuel Level. Make sure there is adequate fuel supply; keep tanks full to allow operation for extended periods.

Battery. Check battery connections and level of battery electrolyte.

Air Cleaner. Keep air cleaner element clean and correctly installed to prevent unfiltered air from entering engine.

Drive Belts. Check belt condition and tension of radiator fan, water pump, and battery charging alternator belt(s).

Operating Area. Check for obstructions that could block the flow of cooling air. Keep the area clean. Do not leave rags, tools, or debris on or near the generator set.

Coolant Level. Maintain coolant level at just below the overflow tube on the radiator filler neck when the engine is cold. Open air bleed petcocks if equipped when filling radiator. Close air bleed petcock when coolant begins to flow from petcock. Keep level in tank between 1/3 full (cold) and 2/3 full (hot) if the unit is equipped with a coolant recovery tank. A coolant solution of 50% ethylene glycol and 50% clean, softened water is recommended to inhibit rust/corrosion.

A coolant solution of 50% ethylene glycol will provide freezing protection to -34°F (-37°C) and overheating protection to 265°F (129°C). A coolant solution with less than 50% ethylene glycol may not provide adequate freezing and overheating protection. A coolant solution with more than 50% ethylene glycol can cause damage to engine and components. Do not use alcohol or methanol antifreeze or mix them with the specified coolant. Consult the engine manufacturer's operation manual for specific engine coolant specifications.

Do not add coolant to an engine that has overheated until engine has cooled. Adding coolant to an extremely hot engine can cause a cracked block or cylinder head.

NOTE

Do not turn on block heater before filling cooling system. Before energizing block heater, run engine until warm and refill radiator to purge air from the system. Block heater failure will result if heater element is not immersed in water.

Exhaust System. Keep the exhaust outlet clear; silencer and piping must be tight and in good condition.

Lamp Test. Press the lamp test button (if equipped) to verify all controller lamps are operational.

Exercising the Generator Set

If the generator set is not equipped with an automatic transfer switch or the transfer switch does not have the automatic exercise option, run the generator set under load once a week for one hour with an operator present. Make all prestart checks before starting the exercise procedure. Start the generator set according to the procedure given for the generator controller. See the appropriate controller section for specific starting instructions.

16-Light Controller (Level 1) Operation

The 16-light microprocessor controller (level 1) is available in the standard model and the oversize meterbox version (for installation of additional meters and gauges). For identification of 16-light controller components (standard and oversize meterbox) and an explanation of their functions, refer to Figure 2-1 and the following descriptions.

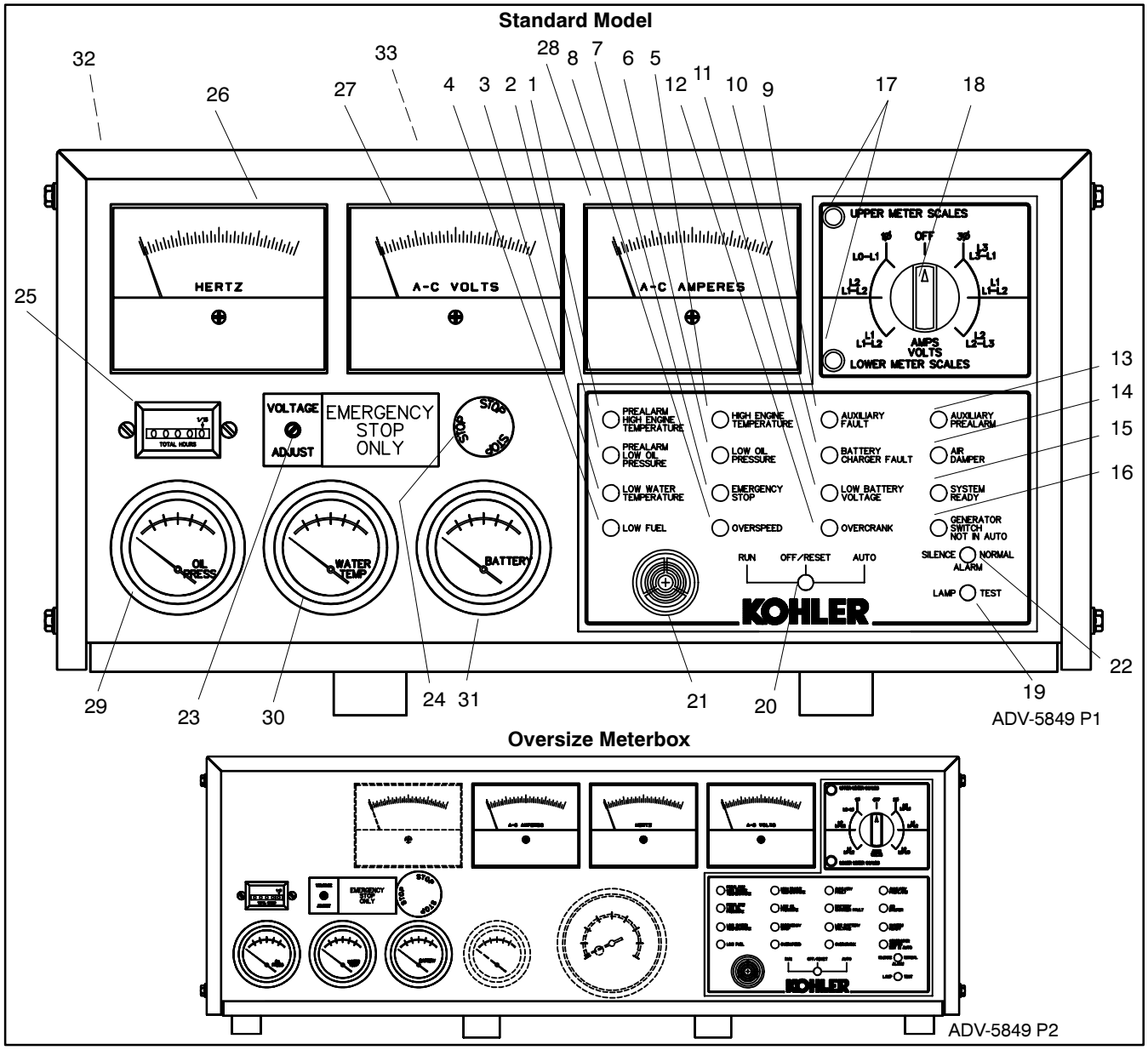

1. Anticipatory High Engine Temperature Lamp
2. Anticipatory Low Oil Pressure Lamp
3. Low Water Temperature Lamp
4. Low Fuel Lamp
5. High Engine Temperature Lamp
6. Low Oil Pressure Lamp
7. Emergency Stop Lamp
8. Overspeed Lamp
9. Auxiliary Lamp
10. Battery Charger Fault Lamp
11. Low Battery Volts Lamp
12. Overcrank Lamp
13. Auxiliary Prealarm Lamp
14. Air Damper Lamp
15. System Ready Lamp
16. Generator Switch Not in Auto Lamp
17. Scale Lamps (Upper/Lower)
18. Selector Switch
19. Lamp Test
20. Generator Master Switch
21. Alarm Horn
22. Alarm Silence Switch
23. Voltage Adjustment Pot
24. Emergency Stop Switch
25. Hourmeter
26. Frequency Meter
27. AC Voltmeter
28. AC Ammeter
29. Oil Pressure Gauge
30. Water Temperature Gauge
31. DC Voltmeter
32. Fuses (Inside Controller)
33. Controller TB1 Terminal Strip (on Circuit Board)

Figure 2-1. 16-Light Microprocessor Controller (Standard and Oversize Meterbox Models)

NOTE

Some installations use the 16-light microprocessor controller with switchgear applications. These are nonstandard controllers with remote start and no time delay for engine cooldown circuitry. Consult switchgear literature for configuration and function.

Features

The numbered paragraphs following refer to Figure 2-1.

1. **Anticipatory High Engine Temperature (if equipped).** Lamp lights if engine coolant temperature approaches shutdown range.
2. **Anticipatory Low Oil Pressure (if equipped).** Lamp lights if engine oil pressure approaches shutdown range.
3. **Low Water Temperature (if equipped).** Lamp lights if water temperature approaches critical range.
4. **Low Fuel (if equipped).** Lamp lights if fuel level in tank approaches empty.
5. **High Engine Temperature.** Lamp lights if engine has shut down due to high engine coolant temperature. Shutdown occurs 5 seconds after engine reaches temperature shutdown range.
6. **Low Oil Pressure.** Lamp lights if set shuts down due to insufficient oil pressure. Shutdown occurs 5 seconds after engine reaches pressure shutdown range.
7. **Emergency Stop (if equipped).** Lamp lights and engine stops if emergency stop is made (local or remote).
8. **Overspeed.** Lamp lights if set shuts down due to overspeed condition (governed frequency exceeding 70 Hz).
9. **Auxiliary.** Lamp flashes/lights under the following conditions:

   Flashing Lamp Conditions

   - Auxiliary lamp will flash immediately if the controller senses no AC output while the unit is running (except during first 10 seconds after start-up). When AC output is sensed, the flashing will stop and the lamp will be off. No manual reset is required.
   - The auxiliary lamp will flash if the battery power was reconnected or was low and then came back up again while the generator master switch was in the RUN or AUTO position. A temporarily low battery condition where the battery is weak or undersized for the application may cause this condition.

   Continuous On Lamp Conditions

   - The auxiliary lamp lights if the optional emergency stop switch is reset while the generator master switch is in the AUTO or RUN position. To clear this condition, place master switch in the OFF/RESET position.
   - The auxiliary lamp lights and engine shuts down 5 seconds after high oil temperature (P1-13), low coolant level (P1-14), or aux. delay shutdown (P1-15) faults (if so equipped) occur. These conditions are inhibited during first 30 seconds after crank disconnect.
   - The auxiliary lamp lights and engine shuts down immediately if overvoltage condition arises (if equipped with overvoltage shutdown kit).
   - The auxiliary lamp lights and engine shuts down if activated by customer-supplied sensing devices connected to auxiliary immediate-shutdown ports (P1-17 and P1-18).
10. **Battery Charger Fault (if battery charger equipped and connected).** Lamp lights if battery charger malfunctions.

11. **Low Battery Volts (if Battery Charger equipped and connected).** Lamp lights if battery voltage drops below preset level.

12. **Overcrank.** Lamp lights and cranking stops if engine does not start after 45 seconds of continuous cranking or 75 seconds of cyclic cranking. See Auto Starting.

    - Cranking stops and overcrank lamp lights after 15 seconds if starter or engine will not turn (locked rotor).
    - Overcrank lamp flashes if speed sensor signal is absent longer than one second.

    NOTE

    The controller is equipped with an automatic restart function. The generator set will attempt to restart if the engine speed drops below 13 Hz. Decreased engine speed causes an overcrank condition.

13. **Auxiliary Prealarm.** Lamp is activated by customer-provided sensing devices.

14. **Air Damper.** Lamp lights after emergency stop or overspeed fault or overvoltage fault. Lamp indicates that engine air damper is closed; lamp remains lit until air damper is manually reset. See Resetting Emergency Stop Switches later in this section. (Used on 200-1600 kW models with Detroit Diesel engines only).

15. **System Ready.** Lamp lights when generator master switch is in AUTO position and the system senses no faults.

16. **Generator Switch Not in Auto.** Lamp lights when generator master switch is in RUN or OFF/RESET position.

17. **Scale Lamps (Upper/Lower).** Lamps indicate which AC voltmeter and/or ammeter scales to read.

18. **Selector Switch.** Switch selects generator output circuits to measure. When switched to a position with three circuit lead labels, amperage is measured on the upper lead and voltage is measured between the lower two leads. AC ammeter and voltmeter will not register with switch in the OFF position.

19. **Lamp Test.** Switch tests the controller indicator lamps.

20. **Generator Master Switch.** Switch functions as controller reset and generator operation switch. Refer to Starting, Stopping, and Controller Resetting Procedure following.

21. **Alarm Horn.** Horn sounds if any fault or anticipatory condition exists (except emergency stop, battery charger fault, or low battery volts). Place generator master switch in the AUTO position before silencing alarm horn. See Controller Resetting Procedure following.

22. **Alarm Silence.** Switch disconnects alarm during servicing (place generator master switch in the AUTO position before silencing alarm horn). Restore alarm horn switches at all locations (controller, remote annunciator, or audio/visual alarm) to normal position after fault shutdown is corrected to avoid reactivating alarm horn. See Controller Resetting Procedure following.

23. **Voltage Adjustment.** Fine adjustment for generator output voltage.

24. **Emergency Stop (If equipped).** Switch is used to instantly shut down the generator set in emergency situations. Reset switch after shutdown by rotating switch clockwise. Use the emergency stop switch for emergency shutdowns only. Use the generator master switch to stop the set under normal circumstances.

25. **Hourmeter.** Hourmeter records generator set total operating hours for reference in scheduling maintenance.

26. **Frequency Meter.** Meter measures frequency (Hz) of generator output voltage.

27. **AC Voltmeter.** Meter measures voltage across output leads indicated by selector switch.

28. **AC Ammeter.** Meter measures amperage from output leads indicated by selector switch.

29. **Oil Pressure Gauge.** Gauge measures engine oil pressure.

30. **Water Temperature Gauge.** Gauge measures engine coolant temperature.

31. **DC Voltmeter.** Meter measures voltage of starting battery(ies).

32. **Fuses.** Fuses are located on controller circuit board. See Figure 2-2.

    - **3-Amp Remote Annunciator (F1).** Fuse protects dry contact kit (if equipped).
    - **3-Amp Controller (F2).** Fuse protects controller circuit board, speed sensor, and lamp circuit board.
    - **15-Amp Engine and Accessories (F3).** Fuse protects engine/starting circuitry and accessories.

33. **Controller TB1 Terminal Strip (on Circuit Board).** Terminal strip allows connection of generator accessories such as emergency stop switch, remote start/stop switch, audio/visual alarms, etc. Crank mode selection (cyclic or continuous) is also made on the TB1 terminal strip. Location of the TB1 terminal strip on the controller circuit board is shown in Figure 2-2. Refer to appropriate wiring diagrams for additional information on connecting accessories to the TB1 terminal strip.

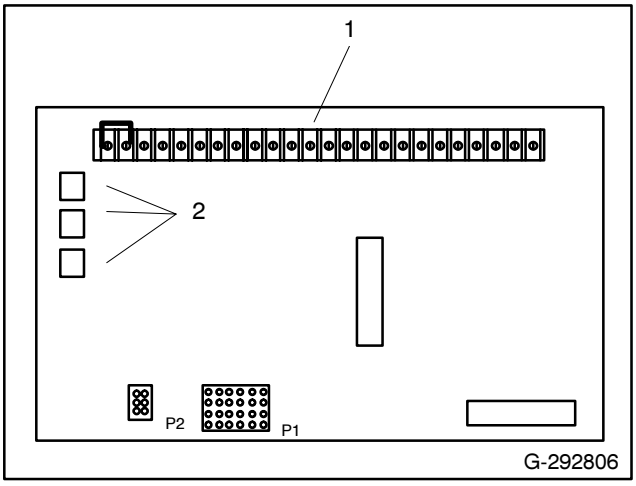

1. TB1 Terminal Strip
2. Fuses

Figure 2-2. TB1 Terminal Strip on Controller Circuit Board

Starting

Local Starting

Move the generator master switch to the RUN position to start the generator set at the controller.

NOTE

The alarm horn will sound and the Not In Auto lamp will light whenever the generator master switch is not in the AUTO position.

NOTE

The 16-light controller is equipped with a transient start/stop function to avoid accidental cranking of the rotating engine. If the generator master switch is momentarily placed in the OFF/RESET position then quickly returned to RUN, the generator set will slow to 249 RPM and recrank before returning to rated speed.

Auto Starting

Move the generator master switch to the AUTO position to allow start-up by automatic transfer switch or remote start/stop switch (connected to controller terminals 3 and 4).

NOTE

The 16-light microprocessor controller provides up to 45 seconds of continuous cranking or 75 seconds of cyclic cranking (crank 15 seconds, rest 15 seconds, crank 15 seconds, etc.) before overcrank shutdown. Cranking mode (cyclic or continuous) selection is made on the controller circuit board terminal strip. For cyclic cranking, leave circuit board terminal TB1-9 open. Continuous cranking is achieved by running a jumper between circuit board terminal TB1-2 (ground) and terminal TB1-9.

Stopping

Normal Stopping

1. Disconnect load from generator set and allow it to run without load for 5 minutes.

   NOTE

   Run the generator at no load for 5 minutes prior to stopping to ensure adequate cooling of the set.

2. Move generator master switch to the OFF/RESET position. Engine will stop.

   NOTE

   If engine stop is signaled by a remote switch or automatic transfer switch, the generator set will continue running during a 5-minute cooldown cycle.

Emergency Stopping

Turn generator master switch to the OFF/RESET position or activate controller emergency stop switch (if equipped) or optional remote emergency stop for immediate shutdown. If either emergency stop switch is activated, the controller emergency stop lamp will light and the unit will shut down.

NOTE

Use the emergency stop switch(es) for emergency shutdowns only. Use the generator master switch to stop the generator set under normal circumstances.

Resetting Emergency Stop Switches

Use the following procedure to restart the generator set after shutdown by emergency stop switch (local or remote). Refer to Controller Resetting Procedure later in this section to restart the generator set following a fault shutdown.

1. Investigate cause of emergency stop and correct problem(s).
2. If remote emergency stop switch was activated, reset switch by replacing glass piece. If controller-mounted emergency stop switch was activated (if equipped), reset controller emergency stop switch by rotating switch clockwise until switch springs back to original position.

   NOTE

   The controller auxiliary lamp will light if the generator master switch is in the RUN or AUTO position during the resetting procedure.

3. If controller air damper light is on, reset air damper on engine by rotating air damper lever as shown in Figure 2-3 and the air damper light will go out. (Used on 200-1600 kW models with Detroit Diesel engines only).
4. Toggle generator master switch to OFF/RESET and then to RUN or AUTO to resume operation. The generator set will not crank until the resetting procedure is completed.

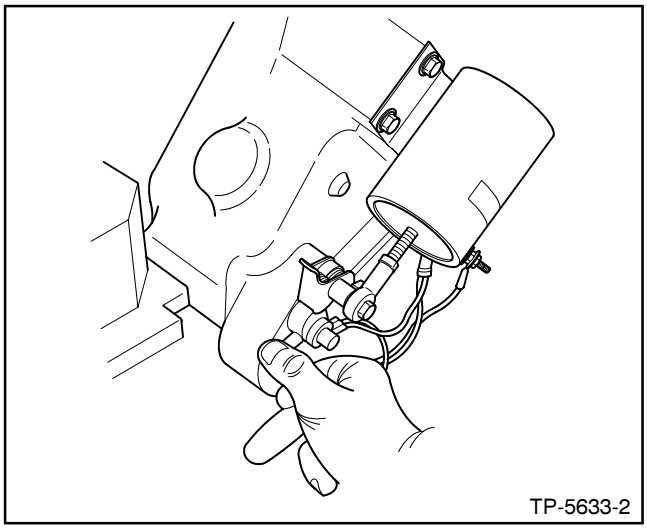

Figure 2-3. Air Damper Lever (Detroit Diesel Powered)

Fault Shutdowns

The generator set will shut down automatically under the following fault conditions:

Overspeed. Unit shuts down immediately if governed frequency exceeds 70 Hz (2100 RPM) on 50 and 60 Hz models.

Overcrank. Shutdown occurs after 45 seconds of continuous cranking. Shutdown occurs after 75 seconds of cyclic cranking (crank 15 seconds, rest 15 seconds, crank 15 seconds, etc., for a total of 75 seconds). Shutdown occurs after 15 seconds if engine or starter will not turn (locked rotor).

Low Oil Pressure. Shutdown occurs 5 seconds after fault. Low oil pressure shutdown will not function during the first 30 seconds after start-up.

NOTE

Low oil pressure shutdown will not protect against low oil level. Check for oil level at engine.

High Engine Temperature. Shutdown occurs 5 seconds after fault. High engine temperature shutdown will not function during first 30 seconds after start-up.

NOTE

High temperature shutdown will not function if proper coolant level is not maintained.

Low Coolant Level. Shutdown occurs 5 seconds after fault. Low coolant level shutdown will not function during the first 30 seconds after start-up.

NOTE

Low oil pressure, high engine temperature, and low coolant level shutdowns will not function during the first 30 seconds after start-up.

Overvoltage (if equipped). Unit will shut down after approximately two seconds of voltage 15% or more over nominal voltage. Low water temperature/auxiliary lamp will light.

NOTE

Sensitive equipment may suffer damage in less than one second of an overvoltage condition. Install separate overvoltage protection to on-line equipment requiring faster shutdowns.

Controller Resetting Procedure (Following Fault Shutdown)

Use the following procedure to restart the generator set after a fault shutdown. Refer to Resetting Emergency Stop Switches earlier in this section to reset the generator set after an emergency stop.

1. Move controller alarm horn switch to the SILENCE position. If equipped, A/V annunciator alarm horn and lamp are activated. Move A/V annunciator alarm switch to SILENCE to stop alarm horn. A/V annunciator lamp stays lit.
2. Disconnect generator set from load with line circuit breaker or automatic transfer switch.
3. Correct cause of fault shutdown. See Safety Precautions section of this manual before proceeding.
4. Start generator set by moving the generator master switch to OFF/RESET and then to the RUN position. If equipped, A/V annunciator alarm horn sounds and lamp goes out.
5. Verify that the cause of the shutdown has been corrected by test operating generator set.
6. Reconnect generator to load via line circuit breaker or automatic transfer switch.
7. Move generator master switch to AUTO position for start-up by remote transfer switch or remote start/stop switch. If equipped, move A/V annunciator alarm switch to NORMAL.
8. Move controller alarm horn switch to the NORMAL position.

   Place generator master switch in the AUTO position before silencing alarm horn.

6-Light Controller (Level 2) Operation

The 6-light microprocessor controller (level 2) is available in the standard model and the oversize meterbox version (for installation of additional meters and gauges). For identification of controller components (standard and oversize meterbox) and an explanation of their functions, refer to Figure 2-4 and the following descriptions.

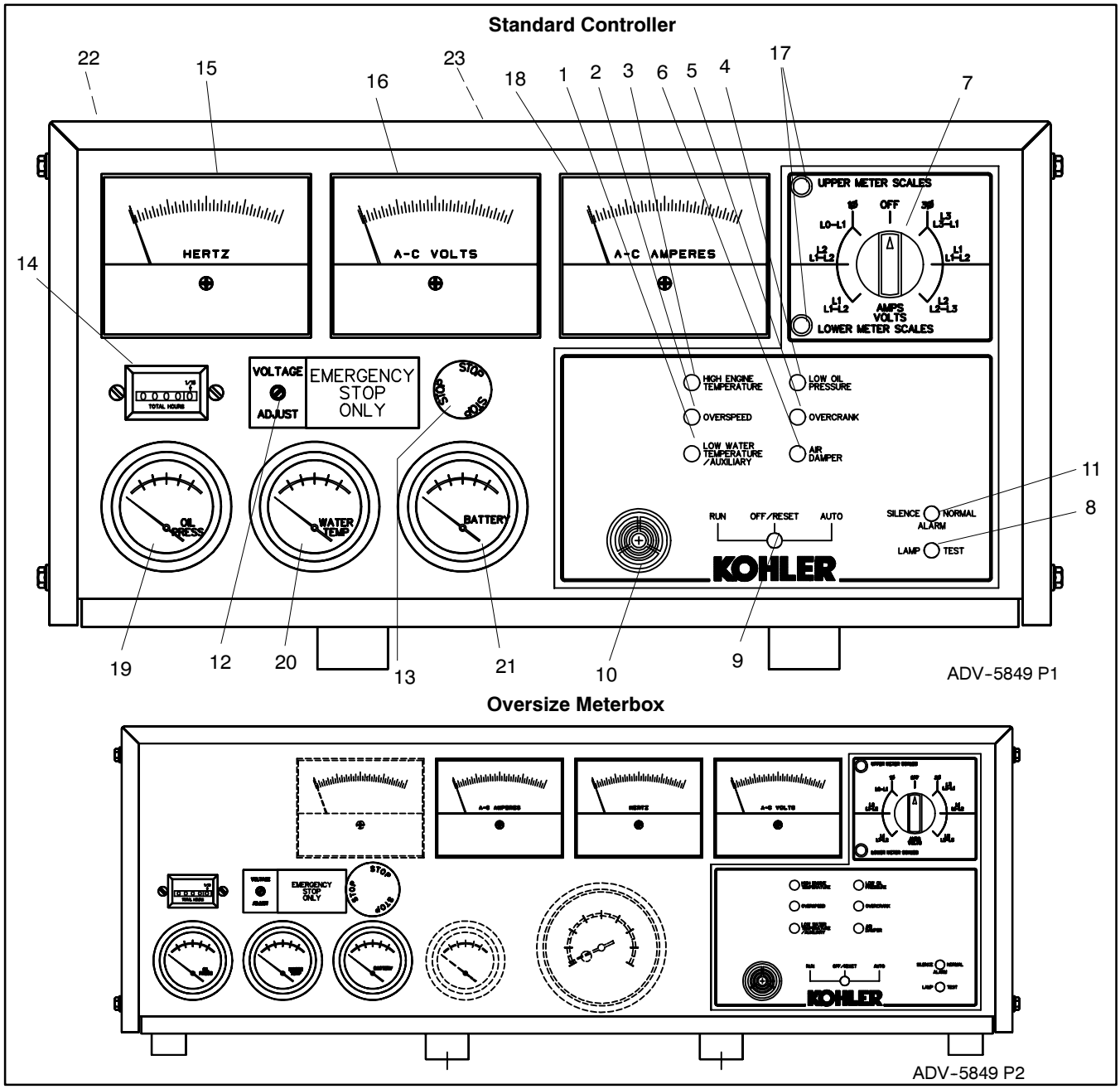

1. Low Water Temperature/Aux. Lamp
2. Overspeed Lamp
3. High Engine Temperature Lamp
4. Air Damper Lamp
5. Overcrank Lamp
6. Low Oil Pressure Lamp
7. Selector Switch
8. Lamp Test
9. Generator Master Switch
10. Alarm Horn
11. Alarm Silence Switch
12. Voltage Adjustment Pot
13. Emergency Stop Switch
14. Hourmeter
15. Frequency Meter
16. AC Voltmeter
17. Scale Lamps (upper/lower)
18. AC Ammeter
19. Oil Pressure Gauge
20. Water Temperature Gauge
21. DC Voltmeter
22. Fuses (Inside Controller)
23. Controller TB1 Terminal Strip (on Circuit Board)

Figure 2-4. 6-Light Microprocessor Controller (Standard and Oversize Meterbox Models)

Features

The numbered paragraphs following refer to Figure 2-4.

1. **Low Water Temperature (LWT)/Auxiliary.** Flashing or continuously on lamp indicates a fault has occurred.

   Flashing Lamp Conditions

   - The LWT/auxiliary lamp will flash immediately if the controller senses no AC output while the unit is running (except during first 10 seconds after start-up). When AC output is sensed, the flashing will stop and the lamp will be off. No manual reset is required.
   - The LWT/auxiliary lamp will flash if the battery power was reconnected or was low and then came back up again while the generator master switch was in the RUN or AUTO position. A temporarily low battery condition where the battery is weak or undersized for the application may cause this condition. Place the master switch in the OFF/RESET position to clear this condition.

   Continuous On Lamp Conditions

   - The LWT/auxiliary lamp lights and unit shuts down immediately if the optional emergency stop switch is activated (if equipped with optional emergency stop switch).
   - The LWT/auxiliary lamp lights if the optional emergency stop switch is reset while the generator master switch is in the AUTO or RUN position. Place the generator master switch in the OFF/RESET position to clear this condition.
   - The LWT/auxiliary lamp lights and engine shuts down 5 seconds after high oil temperature (P1-13), low coolant level (P1-14), or aux. delay shutdown (P1-15) faults (if so equipped) occur. These conditions are inhibited during first 30 seconds after crank disconnect.
   - The LWT/auxiliary lamp lights and engine shuts down immediately if overvoltage condition arises (if equipped with overvoltage shutdown kit).
   - The LWT/auxiliary lamp lights and engine shuts down if activated by customer-supplied sensing devices connected to auxiliary immediate shutdown ports (P1-17 and P1-18).
   - The LWT/auxiliary lamp lights if engine low water temperature (P1-24) condition occurs (if sensor equipped).

2. **Overspeed.** Lamp lights if set shuts down due to overspeed condition (governed frequency exceeding 70 Hz).

3. **High Engine Temperature.** Lamp lights if engine has shut down due to high engine coolant temperature. Shutdown occurs 5 seconds after engine reaches temperature of shutdown range.

4. **Air Damper.** Lamp lights after emergency stop or overspeed fault or overvoltage fault. Lamp indicates that engine air damper is closed; lamp remains lit until air damper is manually reset. See Resetting Emergency Stop Switches later in this section. (Used on 200-1600 kW models with Detroit Diesel engines only).

5. **Overcrank.** Lamp lights and cranking stops if engine does not start after 45 seconds of continuous cranking or 75 seconds of cyclic cranking. See Auto Starting.

   - Cranking stops and overcrank lamp lights after 15 seconds if starter or engine will not turn (locked rotor).
   - Overcrank lamp flashes if speed sensor signal is absent longer than one second.

   NOTE

   The 6-light controller is equipped with an automatic restart function. The generator set will attempt to restart if the engine speed drops below 13 Hz. Decreased engine speed causes an overcrank condition.

6. **Low Oil Pressure.** Lamp lights if set shuts down due to insufficient oil pressure. Shutdown occurs 5 seconds after engine reaches pressure shutdown range.

7. **Selector Switch.** Selects generator output circuits measure. When switched to a position with three circuit lead labels, amperage is measured on the upper lead and voltage is measured between the lower two leads. AC ammeter and voltmeter will not register with switch in the OFF position.

8. **Lamp Test.** Switch tests the controller indicator lamps.

9. **Generator Master Switch.** Switch functions as controller reset and generator operation switch. Refer to Starting, Stopping, and Controller Resetting Procedure following.

10. **Alarm Horn.** Sounds if any fault or anticipatory condition exists (except emergency stop, battery charger fault, or low battery volts). Place generator master switch in the AUTO position before silencing alarm horn. See Controller Resetting Procedure following.

11. **Alarm Silence.** Switch disconnects alarm during servicing (place generator master switch in the AUTO position before silencing alarm horn). Restore alarm horn switches at all locations (controller, remote annunciator, or audio/visual alarm) to normal position after fault shutdown is corrected to avoid reactivating alarm horn. See Controller Resetting Procedure following.

12. **Voltage Adjustment.** Fine adjustment for generator output voltage.

13. **Emergency Stop (If equipped).** Switch is used to instantly shut down the generator set in emergency situations. Reset switch after shutdown by rotating switch clockwise. Use the emergency stop switch for emergency shutdowns only. Use the generator master switch to stop the set under normal circumstances.

14. **Hourmeter.** Hourmeter records generator set total operating hours for reference in scheduling maintenance.

15. **Frequency Meter.** Meter measures frequency (Hz) of generator output voltage.

16. **AC Voltmeter.** Meter measures voltage across output leads indicated by selector switch.

17. **Scale Lamps (Upper/Lower).** Lamps indicate which AC voltmeter and/or ammeter scales to read.

18. **AC Ammeter.** Meter measures amperage from output leads indicated by selector switch.

19. **Oil Pressure.** Gauge measures engine oil pressure.

20. **Water Temperature.** Gauge measures engine coolant temperature.

21. **DC Voltmeter.** Meter measures voltage of starting battery(ies).

22. **Fuses.** Fuses are located on controller circuit board. See Figure 2-5.

    - **3-Amp Remote Annunciator (F1).** Fuse protects dry contact kit (if equipped).
    - **3-Amp Controller (F2).** Fuse protects controller circuit board, speed sensor, and lamp circuit board.
    - **15-Amp Engine and Accessories (F3).** Fuse protects engine/starting circuitry and accessories.

23. **Controller TB1 Terminal Strip (on Circuit Board).** Terminal strip allows connection of generator accessories such as emergency stop switch, remote start/stop switch, audio/visual alarms, etc. Crank mode selection (cyclic or continuous) is also made on the TB1 terminal strip. Location of the TB1 terminal strip on the controller circuit board is shown in Figure 2-5. Refer to appropriate wiring diagrams for additional information on connecting accessories to the TB1 terminal strip.

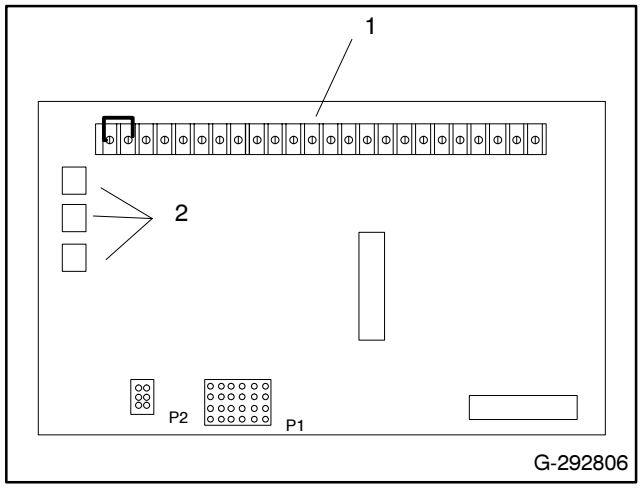

1. TB1 Terminal Strip
2. Fuses

Figure 2-5. TB1 Terminal Strip on Controller Circuit Board

Starting

Local Starting

Move the generator master switch to the RUN position to start the generator set at the controller.

NOTE

The 6-light controller is equipped with a transient start/stop function to avoid accidental cranking of the rotating engine. If the generator master switch is momentarily placed in the OFF/RESET position then quickly returned to RUN, the generator set will slow to 249 RPM and recrank before returning to rated speed.

Auto Starting

Move the generator master switch to the AUTO position to allow start-up by automatic transfer switch or remote start-stop switch (connected to controller terminals 3 and 4).

NOTE

The 6-light microprocessor controller provides up to 45 seconds of continuous cranking or 75 seconds of cyclic cranking (crank 15 seconds, rest 15 seconds, crank 15 seconds, etc.) before overcrank shutdown. Cranking mode (cyclic or continuous) selection is made on the controller circuit board terminal strip. For cyclic cranking, leave circuit board terminal TB1-9 open. Continuous cranking is achieved by running a jumper between circuit board terminal TB1-2 (ground) and terminal TB1-9.

Stopping

Normal Stopping

1. Disconnect load from generator set and allow it to run without load for 5 minutes.

NOTE

Run the generator at no load for 5 minutes prior to stopping to ensure adequate cooling of the set.

2. Move generator master switch to the OFF/RESET position. Engine will stop.

NOTE

If engine stop is signaled by a remote switch or automatic transfer switch, the generator set will continue running during a 5-minute cooldown cycle.

Emergency Stopping

Turn generator master switch to the OFF/RESET position or activate controller emergency stop switch (if equipped) or optional remote emergency stop for immediate shutdown. If either emergency stop switch is activated, the controller low water temperature/auxiliary lamp will light and the unit will shut down. On 200-1600 kW models with Detroit Diesel engines, both the air damper and low water temperature/auxiliary lamps will light if the emergency stop switch is activated.

NOTE

Use the emergency stop switch(es) for emergency shutdowns only. Use the generator master switch to stop the generator set under normal circumstances.

Resetting Emergency Stop Switches

Use the following procedure to restart the generator set after shutdown by emergency stop switch (local or remote). Refer to Controller Resetting Procedure later in this section to restart the generator set following a fault shutdown.

1. Investigate cause of emergency stop and correct problem(s).
2. If remote emergency stop switch was activated, reset switch by replacing glass piece. If controller-mounted emergency stop switch was activated (if equipped), reset controller emergency stop switch by rotating switch clockwise until switch springs back to original position.

NOTE

The controller auxiliary lamp will light if the generator master switch is in the RUN or AUTO position during the resetting procedure.

3. If controller air damper light is on, reset air damper on engine by rotating air damper lever as shown in Figure 2-6 and the air damper light will go out. (Used on 200-1600 kW models with Detroit Diesel engines only).
4. Toggle generator master switch to OFF/RESET and then to RUN or AUTO to resume operation. The generator set will not crank until the resetting procedure is completed.

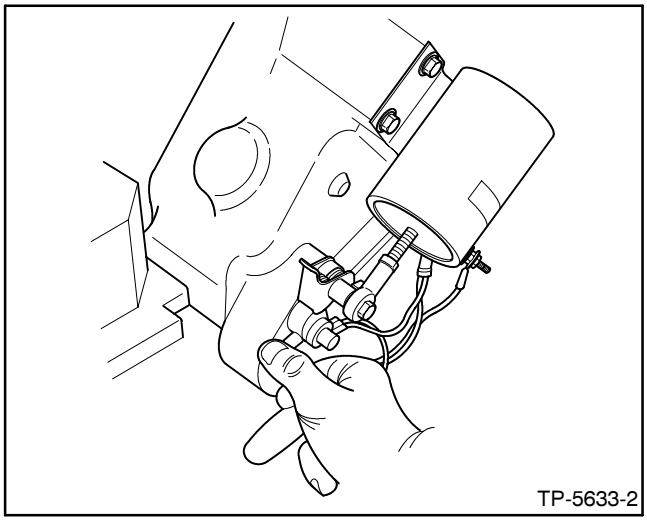

Figure 2-6. Air Damper Lever (Detroit Diesel Powered)

Fault Shutdowns

The generator set will shut down automatically under the following fault conditions:

Overspeed. Unit shuts down immediately if governed frequency exceeds 70 Hz (2100 RPM) on 50 and 60 Hz models.

Overcrank. Shutdown occurs after 45 seconds of continuous cranking. Shutdown occurs after 75 seconds of cyclic cranking (crank 15 seconds, reset 15 seconds, crank 15 seconds, etc., for a total of 75 seconds). Shutdown occurs after 15 seconds if engine or starter will not turn (locked rotor).

Low Oil Pressure. Shutdown occurs 5 seconds after fault. Low oil pressure shutdown will not function during the first 30 seconds after start-up.

NOTE

Low oil pressure shutdown will not protect against low oil level. Check for oil level at engine.

High Engine Temperature. Shutdown occurs 5 seconds after fault. High engine temperature shutdown will not function during first 30 seconds after start-up.

NOTE

High temperature shutdown will not function if coolant level is not maintained.

Low Coolant Level. Shutdown occurs 5 seconds after fault. Low coolant level shutdown will not function during the first 30 seconds after start-up.

NOTE

Low oil pressure, high engine temperature, and low coolant level shutdowns will not function during the first 30 seconds after start-up.

Overvoltage (if equipped). Unit will shut down after approximately two seconds of voltage 15% or more over nominal voltage. Low water temperature/auxiliary lamp will light.

NOTE

Sensitive equipment may suffer damage in less than one second of an overvoltage condition. Install separate overvoltage protection to on-line equipment requiring faster shutdowns.

Controller Resetting Procedure (Following Fault Shutdown)

Use the following procedure to restart the generator set after a fault shutdown. Refer to Resetting Emergency Stop Switches earlier in this section to reset the generator after an emergency stop.

1. Move controller alarm horn switch to the SILENCE position. If equipped, A/V annunciator alarm horn and lamp are activated. Move A/V annunciator alarm switch to SILENCE to stop alarm horn. A/V annunciator lamp stays lit.
2. Disconnect generator set from load with line circuit breaker or automatic transfer switch.
3. Correct cause of fault shutdown. See Safety Precautions section of this manual before proceeding.
4. Start generator set by moving the generator master switch to OFF/RESET and then to the RUN position. If equipped, A/V annunciator alarm horn sounds and lamp goes out.
5. Verify that the cause of the shutdown has been corrected by test operating generator set.
6. Reconnect generator to load via line circuit breaker or automatic transfer switch.
7. Move generator master switch to AUTO position for start-up by remote transfer switch or remote start/stop switch. If equipped, move A/V annunciator alarm switch to NORMAL.
8. Move controller alarm horn switch to the NORMAL position.

   Place generator master switch in the AUTO position before silencing alarm horn.

Paralleling Engine Gauge Box Controller Operation (Switchgear)

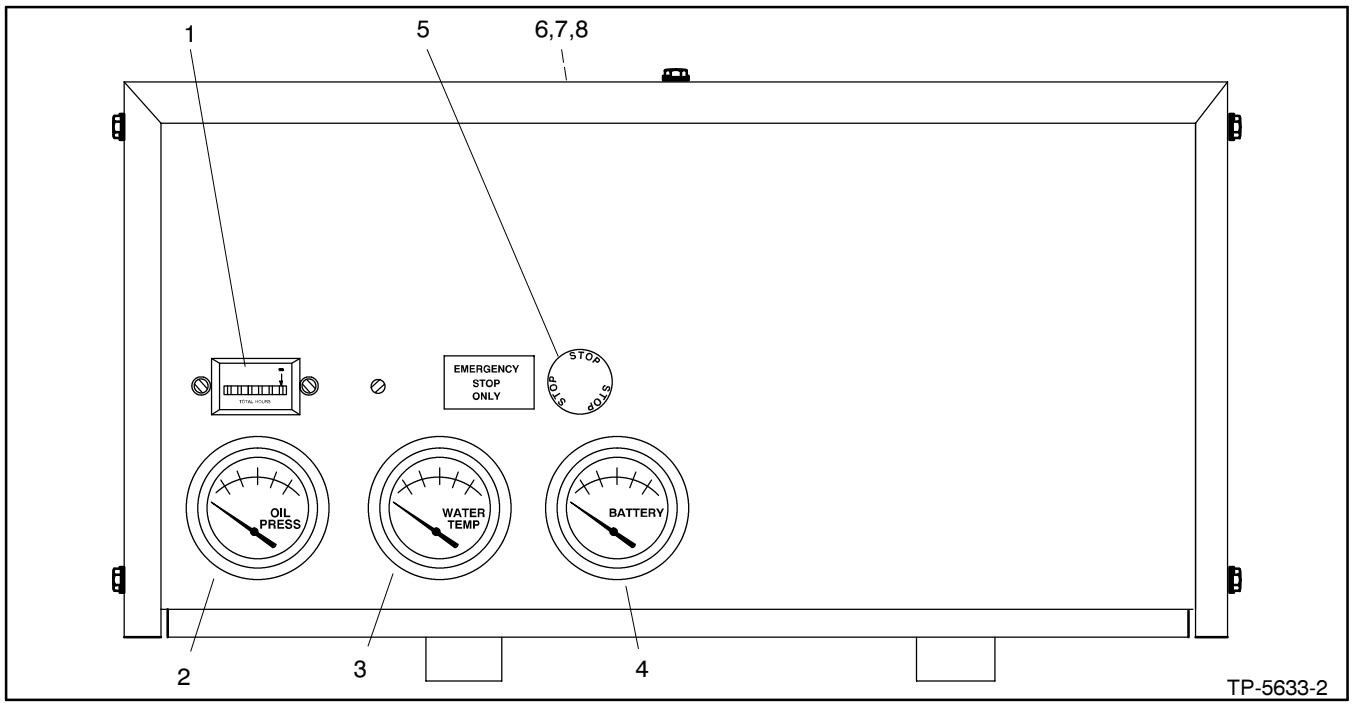

1. Hourmeter
2. Oil Pressure Gauge
3. Water Temperature Gauge
4. DC Voltmeter
5. Emergency Stop Switch (if equipped)
6. Gauge Box Terminal Strips (inside controller)
7. Connection Plug (inside controller)
8. Electronic Speed Switch (inside controller)

Figure 2-7. Paralleling Engine Gauge Box Controller Operation (Switchgear)

The paralleling engine gauge box is designed for interconnecting the generator set with switchgear-mounted control logic. An engine gauge box is required for each generator set in the paralleling system. Other than the emergency stop switch (if equipped), no operating controls are included in the engine gauge box—generator set operating controls are included in the switchgear. A connection plug is used to connect the generator set governor, crank relays, safety switches (high water temperature, low oil pressure, low coolant level), and gauge senders to gauge box terminal strips. The appropriate terminals on the terminal strips are then hard-wired to the switchgear controls. Also included in the gauge box is an electronic speed switch with overspeed and crank outputs. For identification of paralleling meter box components and an explanation of their functions, refer to Figure 2-7 and the following descriptions.

Features

The numbered paragraphs following refer to Figure 2-7.

1. **Hourmeter.** Hourmeter records generator set total operating hours for reference in scheduling maintenance.
2. **Oil Pressure Gauge.** Gauge measures engine oil pressure.
3. **Water Temperature Gauge.** Gauge measures engine coolant temperature.
4. **DC Voltmeter.** Meter measures voltage of starting battery(ies).
5. **Emergency Stop (If equipped).** Switch is used to instantly shut down the generator set in emergency situations. Reset switch after shutdown by rotating switch clockwise. Use the emergency stop switch for emergency shutdowns only. Use the switchgear-mounted operating controls to stop the set under normal circumstances. Local emergency stop switch is standard on 200-1600 kW models with Detroit Diesel Engine.
6. **Gauge Box Terminal Strips.** Use terminal strips to connect switchgear control wiring to generator set governor control, crank relays, safety switches, gauge senders, etc.
7. **Connection Plug.** Use plug to connect wiring harness from generator set governor control, crank relays, safety switches, gauge sender, etc., to gauge box terminal strips.
8. **Electronic Speed Switch.** Switch signals engine control logic in switchgear to disconnect starter motor after start-up or shuts down the system if an overspeed fault occurs. Speed switch settings are adjustable for crank and overspeed.

Manual Controller Operation

The manual controller is designed for prime power applications using manual (nonautomatic) operation. For identification of manual controller components and an explanation of their functions, refer to Figure 2-8 and the following descriptions.

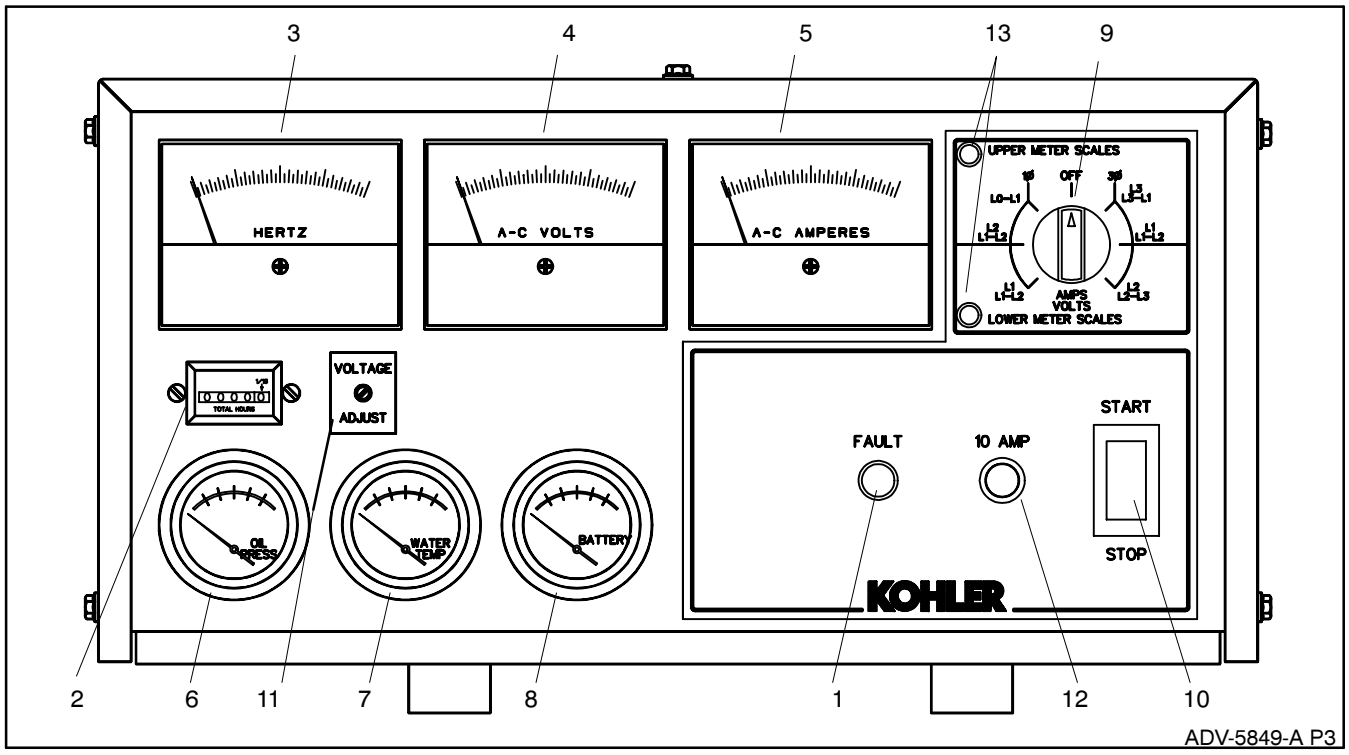

1. Fault Lamp
2. Hourmeter
3. Frequency Meter
4. AC Voltmeter
5. AC Ammeter
6. Oil Pressure Gauge
7. Water Temperature Gauge
8. DC Voltmeter
9. Selector Switch
10. Start/Stop Switch
11. Voltage Adjustment Pot
12. 10-Amp Fuse
13. Scale Lamps (upper/lower)

Figure 2-8. Manual Controller

Features

The numbered paragraphs following refer to Figure 2-8.

1. **Fault Lamp.** Lamp lights during engine shutdown if engine has shut down due to high engine temperature, low oil pressure, low water level, or overspeed faults. See Fault Shutdowns following for additional shutdown information.

   NOTE

   The fault lamp will not stay lit after the unit shuts down on a fault condition.

2. **Hourmeter.** Hourmeter records generator set total operating hours for reference in scheduling maintenance.
3. **Frequency Meter.** Meter measures frequency (Hz) of generator output voltage.
4. **AC Voltmeter.** Meter measures voltage across output leads indicated by selector switch.
5. **AC Ammeter.** Meter measures amperage from output leads indicated by selector switch.
6. **Oil Pressure Gauge.** Gauge measures engine oil pressure.
7. **Water Temperature Gauge.** Gauge measures engine coolant temperature.
8. **DC Voltmeter.** Meter measures voltage of starting battery(ies).
9. **Selector Switch.** Switch selects generator output circuits to be measured. When switched to a position with three circuit lead labels, amperage is measured on the upper lead and voltage is measured between the lower two leads. AC ammeter and voltmeter will not register with switch in the OFF position.
10. **Start/Stop Switch.** Use switch to start and stop generator set. Refer to Starting and Stopping following.
11. **Voltage Adjustment.** Fine adjust for generator output voltage.
12. **10-Amp Fuse.** Fuse protects controller circuitry from short circuits and overloads.
13. **Scale Lamps (upper/lower).** Lamps indicate AC voltmeter and/or ammeter scales to be read.

Starting

Hold controller or remote start/stop switch in START position until the engine starts. If the engine fails to start after cranking for 5-10 seconds, release the switch. Wait for the engine to come to a complete stop before attempting restart.

NOTE

Do not crank engine continuously for more than 10 seconds at a time. Allow a 60-second cooldown period between cranking attempts if the engine does not start. If the engine does not start after three attempts, contact an authorized service distributor/dealer for repair.

Stopping

1. Disconnect load from generator set and allow it to run without load for 5 minutes.

NOTE

Run the generator at no load for 5 minutes prior to stopping to ensure adequate cooling of the set.

2. Press controller or remote start/stop switch to the STOP position. The generator set shuts down.

Fault Shutdowns

The generator set will shut down automatically under the following fault conditions and cannot be restarted until the fault condition has been corrected. The shutdown switches will automatically reset when the problem is corrected or the generator set cools (if overheating was the problem).

NOTE

The fault lamp will not stay lit after the unit shuts down on a fault condition.

Overspeed. Unit shuts down immediately if governed frequency exceeds 70 Hz (2100 RPM) on 50 and 60 Hz models.

Low Oil Pressure. Shutdown occurs after fault. Low oil pressure shutdown will not function during the first 5 seconds after start-up.

NOTE

Low oil pressure shutdown will not protect against low oil level. Check for oil level at engine.

High Engine Temperature. Shutdown occurs after fault. High engine temperature will not function during first 5 seconds after start-up.

NOTE

High temperature shutdown will not function if proper coolant level is not maintained.

Low Coolant Level. Shutdown occurs after coolant level sensor detects no coolant. Low coolant level shutdown will not function during first 5 seconds after start-up.

NOTE

Low oil pressure, high engine temperature, and low coolant level shutdowns will not function during the first 5 seconds after start-up.

Section 3. Scheduled Maintenance

Under normal operating conditions, generator alternator service will not be required on a regular basis. The main areas of attention are listed in the prestart checklist. If operating under extremely dusty and dirty conditions, use DRY compressed air to blow dust out of the generator. Do this with the generator running and direct the stream of air through openings in the generator end bracket.

The end bracket bearing should be replaced every 10,000 hours of operation in standby and prime power applications. Service more frequently if bearing inspection indicates excessive rotor end play or bearing damage from corrosion or heat build-up. Replace the tolerance ring (if equipped) if the end bracket is removed. The end bracket bearing is sealed and requires no additional lubrication. Have all generator service performed by an authorized service distributor/dealer.

Perform generator engine service at the intervals specified by the engine manufacturer in the engine service literature. Contact your authorized service distributor/dealer to obtain service literature for specific models.

⚠ WARNING

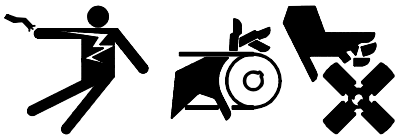

Accidental starting.
Can cause severe injury or death.

Disconnect battery cables before working on generator set (negative lead first and reconnect it last).

Accidental starting can cause severe injury or death. Turn generator set master switch to OFF position, disconnect power to battery charger, and remove battery cables (remove negative lead first and reconnect it last) to disable generator set before working on any equipment connected to generator set. The generator set can be started by automatic transfer switch or remote start/stop switch unless these precautions are followed.

⚠ WARNING

Hot engine and exhaust system.
Can cause severe injury or death.

Do not work on generator set until it is allowed to cool.

Hot parts can cause severe injury or death. Do not touch hot engine parts. An engine gets hot while running and exhaust system components get extremely hot.

⚠ WARNING

Hazardous voltage.

Moving rotor.

Can cause severe injury or death.

Do not operate generator set without all guards and electrical enclosures in place.

Exposed moving parts can cause severe injury or death. Keep hands, feet, hair, and clothing away from belts and pulleys when unit is running. Replace guards, covers, and screens before operating generator set.

Oil Requirements (30, 80, and 100 kW Ford Powered)

To assure long life and minimal engine wear, Ford Motor Company and the generator manufacturer have amended the engine viscosity recommendations for different temperature ranges. Do not use oil recommendations given in the engine operation manual for 30, 80, and 100 kW Ford-Powered models. These models are turbocharged and must use oil recommendations that follow. Oil used in these generator sets must be American Petroleum Institute (API) class SG/CD. API class SF/CD or SF/CC are acceptable substitutes. See Figure 3-1.

For Ambient Temperatures Consistently Above:	Use Viscosity:
32° F (0° C)	20W-50 or 40W
–10° F (–23° C)	10W-40 or 10W50

Figure 3-1. Oil Recommendation for 30, 80, 100 kW Ford-Powered Models

Oil Change Procedure (30, 80, and 100 kW Ford Powered)

The 30 (with LSG-423 engine), 80, and 100 kW Ford-powered models are equipped with turbochargers. See the following service schedule turbocharger maintenance.

After changing the engine lube oil, use the following procedure prior to restarting the generator set to prevent premature turbocharger bearing wear.

1. Place generator master switch to OFF/RESET position (microprocessor controller) or STOP position (manual controller).
2. Remove ignition coil to distributor wire at distributor. Connect jumper wire to ignition coil lead and engine block.

NOTE

ELECTRONIC IGNITION DAMAGE! Damage to the electronic ignition system may occur if the coil is not grounded during turbocharger priming procedure.

3. Remove turbocharger oil drain line at engine connection. Place suitable container under oil drain hose.
4. Place generator master switch to RUN position (microprocessor controller) or START position (manual controller) to crank engine until fresh oil flows from turbocharger oil drain line.

NOTE

STARTER DAMAGE! Do not crank engine continuously for more than 10 seconds at a time. Allow a 60-second cooldown period between cranking intervals to prevent starter motor and/or starter solenoid failure due to overheating.

5. Place generator master switch to OFF/RESET position (microprocessor controller) or STOP position (manual controller).
6. Reconnect turbocharger oil drain line at engine connection.
7. Remove jumper wire and reconnect ignition coil wire to distributor.
8. Test run the generator set for a few minutes and check for oil leaks at turbocharger drain line connection. STOP generator set.
9. Check oil level and add oil as necessary to bring oil up to proper level. Refer to Engine Operation Manual for oil specifications.
10. Wipe up any spilled oil and dispose of rags in a fireproof container. Properly dispose of oil container.

Turbocharger Service Schedule (30, 80, and 100 kW Ford Powered)

	500 Hours or 6 Months	1000 Hours or 12 Months	2000 Hours
Check for abnormal turbo rotor noise during operation (e.g. high frequency pitch) and check for oil leakage at turbocharger.	●		
Check turbo rotor shaft for wear (end play and radial tolerances). See Section 1—Specifications, Engine.		●	
Overhaul Turbocharger			●
Change lube oil*	Refer to Engine Operation Manual		
Change lube oil filter	Refer to Engine Operation Manual		
Change air filter	Refer to Engine Operation Manual		

* See Oil Requirements in this section. Do not use oil recommendations given in engine operation manual for 30, 80, and 100 kW Ford-Powered models. These models are turbocharged and must use oil recommendations given in this manual.

Storage Procedure

Perform the following steps if the generator set is out of service for three months or longer.

1. Drain the lubrication oil (while still warm) from the crankcase and then refill with proper viscosity oil. Run the generator set for a few minutes to distribute the clean oil. Stop generator set.
2. Gasoline fueled engines: Add stabilizer to fuel or drain the fuel from fuel tank to prevent accumulated moisture with the fuel. Drain the carburetor bowl (or run unit until empty). This step is done to prevent the gasoline from becoming stale which causes formation of gum. Use of a gas stabilizer for gasoline-fueled generator sets is permitted in lieu of draining the carburetor bowl. Add the correct amount of gas stabilizer to the fuel and follow all recommendations given by the gas stabilizer manufacturer.

   Gaseous-fueled engines: With the generator set running, shut off gas supply. Run generator set until set stops from lack of fuel.
3. Gasoline- and gaseous-fueled engines: Remove the spark plugs. Pour approximately 1 tablespoon of engine oil into each spark plug hole. Crank the engine two or three revolutions to lubricate the cylinders. Reinstall spark plugs.
4. Clean exterior surface of the generator set and then spread a light film of oil over unpainted metallic surfaces to prevent rust or corrosion.

Section 4. General Troubleshooting

Use the following tables as a quick reference in troubleshooting individual problems. Generator set faults are listed by specific groups and include likely causes and remedies. The source of more detailed information needed to correct a problem is indicated. These sources include various sections of this manual, the generator operation manual, engine operation manual, and engine service manual. Corrective action and testing in many cases requires knowledge of electrical and electronic circuits. It is recommended that service be done only by authorized service distributors/ dealers. Improper repair by unqualified personnel can lead to additional failures.

General Troubleshooting Chart (Sheet 1 of 2)

Problem	Possible Cause	Corrective Action	Reference
Unit will not crank	Weak or dead battery	Recharge or replace; check charger operation	Engine Operation Manual
	Reversed or poor battery connections	Check connections	Wiring Diagrams
	Fuse blown in controller	Replace fuse	Section 5—Controller Troubleshooting Wiring Diagrams
	Emergency stop switch activated (local or remote)*	See Resetting Emergency Stop Switches.	Section 2—Operation
	Fault shutdown	Correct fault and reset controller*	Section 2—Operation
	Generator master switch in OFF position (attempting start-up from remote switch; microprocessor controllers only)	Move generator master switch to AUTO position	Section 2—Operation
Unit cranks but will not start	Improper fuel	Replace fuel	Engine Operation Manual
	No fuel	Add fuel; check fuel control circuit	Engine Service Manual
	Air in fuel system (diesel models)	Bleed air from system	Engine Operation Manual
	Defective ignition system (gas/gasoline models)	Check ignition system	Engine Service Manual
	Air cleaner clogged	Clean or replace filter element	Engine Operation Manual
No AC output	Line circuit breaker or safeguard breaker in the OFF position (if equipped)	Return to the ON position	
	Generator problem such as defective voltage regulator or other internal fault	Test and/or replace	Section 6—Generator/Controller Troubleshooting Section 7—Component Testing and Adjustment

* Not applicable to generator sets equipped with manual controller.

General Troubleshooting Chart (Sheet 2 of 2)

Problem	Possible Cause	Corrective Action	Reference
Low output or excessive drop in voltage	Unit overloaded	Reduce load	
	Engine speed too low	Check governor	Section 7—Component Testing and Adjustment
	Faulty voltage rheostat or voltage regulator	Test and/or replace	Section 6—Generator/Controller Troubleshooting Section 7—Component Testing and Adjustment
Unit stops suddenly	Low oil pressure shutdown	Check oil level (if low, check for leaks)	Engine Operation Manual
	High temperature shutdown	Check for cooling air restrictions or poor belt tension	Engine Operation Manual
	Low coolant level shutdown (if equipped)	Check coolant level (if low, check for leaks); see Safety Precautions and Instructions Section	Engine Operation Manual
	Out of fuel	Add fuel	
	Overcrank shutdown *	Reset—if overcrank fault reoccurs check controller circuit	Section 5—Controller Troubleshooting
	Fuse blown in controller	Replace fuse—if fuse blows again check controller circuit	Section 5—Controller Troubleshooting Wiring Diagrams
	Engine malfunction	Troubleshoot engine	Engine Service Manual
	Overspeed shutdown	Reset—if unit overspeeds again check controller circuit and/or governor	Section 5—Controller Troubleshooting Section 7—Component Testing and Adjustment
	High oil temperature shutdown	Check oil level and type. If shutdown reoccurs, troubleshoot engine lubrication system	Engine Service Manual
	Overvoltage shutdown (if equipped)*	Check controller circuit and/or voltage regulator	Section 5—Controller Troubleshooting Section 6—Generator/Controller Troubleshooting Section 7—Component Testing and Adjustment
	Generator master switch in OFF/RESET position*	Move switch to proper position (RUN or AUTO)	Section 2—Operation
	Emergency stop switch activated (local or remote)*	Check reason for emergency shutdown; reset switch	Section 2—Operation

* Not applicable to generator sets equipped with manual controller.

Section 5. Controller Troubleshooting

Microprocessor Controller—Description

For external features, see Section 2—Operation Microprocessor Controller, Figure 5-1 through Figure 5-5 show locations of controller components and connections. Figure 5-6 and Figure 5-7 are the logic schematics showing input/output circuits for reference in troubleshooting. This information deals directly with the 16-light microprocessor. Information applies to the 6-light microprocessor where applicable.

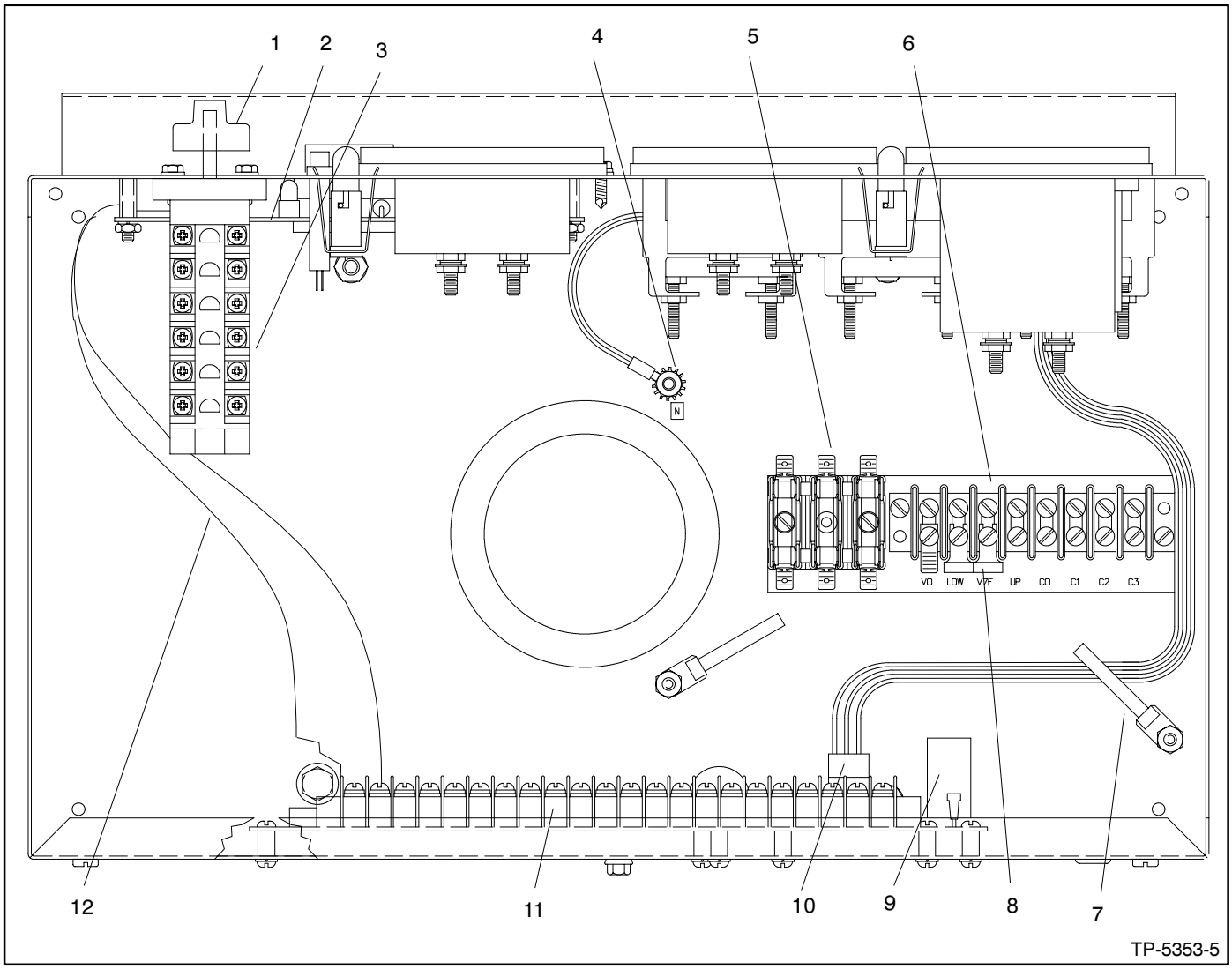

1. Panel Lamps
2. Lamp Circuit Board
3. Selector Switch
4. Controller DC Ground Terminal
5. AC Fuse Terminal Block (TB3)
6. CT/Meter Scale Terminal Block (TB2)
7. Accessory Wire Guide Loops
8. Lamp Selection Jumper
9. Controller Fuses
10. Control Panel Harness Connector (P2)
11. Controller Main Circuit Board
12. P3/P4 Harness

Figure 5-1. Microprocessor Controller

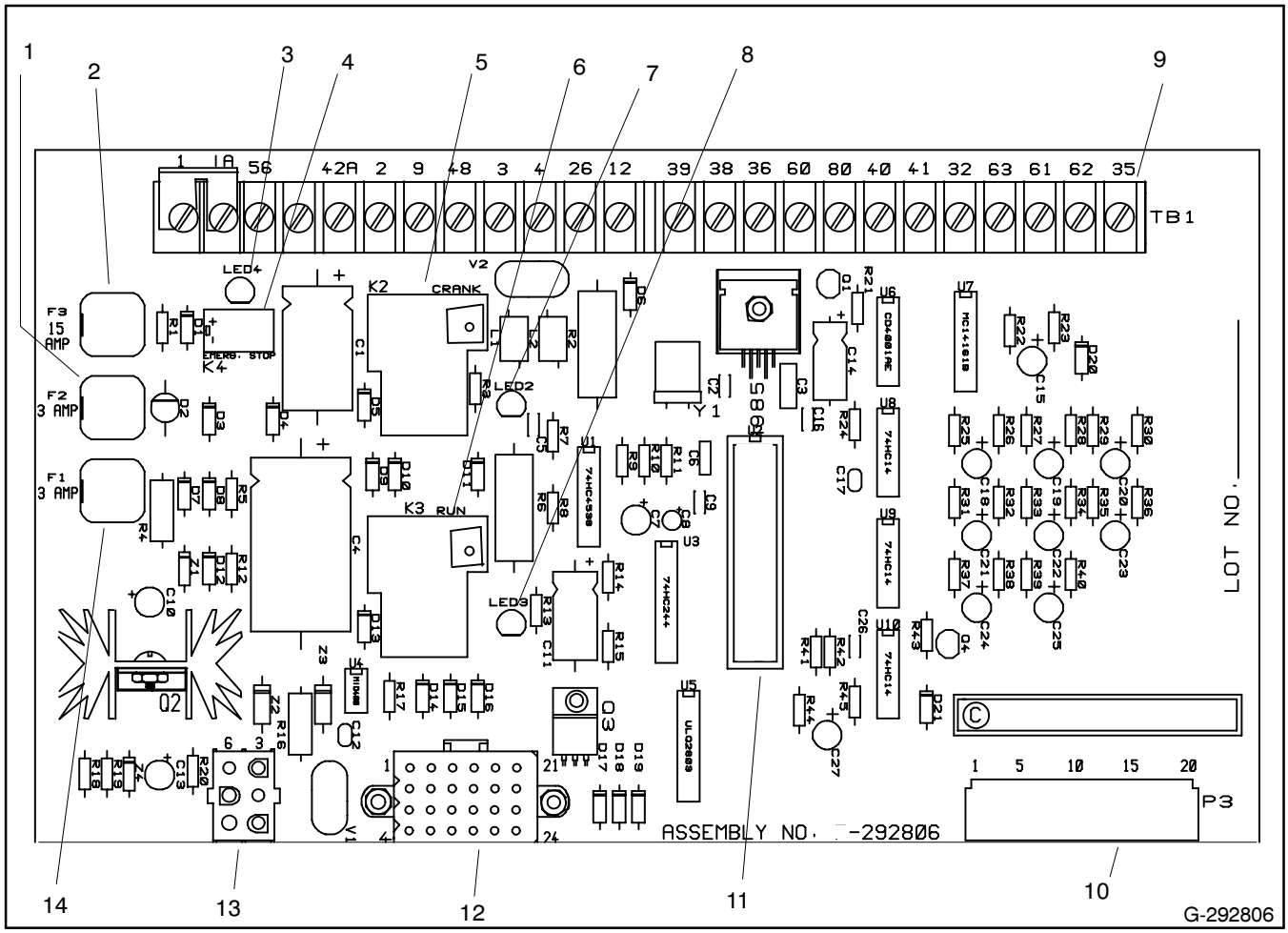

1. Fuse: 3 Amp (F2) Controller
2. Fuse: 15 Amp (F3) Engine and Accessories
3. LED4 (K4 Relay)
4. K4 Relay: Emergency Stop
5. K2 Relay: Control Relay (Crank)
6. K3 Relay: Control Relay (Run)
7. LED2 (K2 Relay)
8. LED3 (K3 Relay)
9. Controller TB1 Terminal Strip
10. P3 Connector (Control Panel Harness) to P4 (LED Indicator Panel Assembly)
11. Microprocessor Chip
12. P1 Connector (DC Harness)
13. P2 Connector (AC Harness)
14. Fuse: 3 Amp (F1) Remote Annunciator

Figure 5-2. Microprocessor Controller Circuit Board Components

Circuit Board Terminal Identification (TB1)

Terminal/Wire	Description
1. 1	Ground – Emergency Stop Relay (K4)
2. 1A	Emergency Stop Relay (K4) Coil
3. 56	Air Damper Indicator
4. Open	
5. 42A	Battery Voltage (Fuse #1 Protected)
6. 2	Ground
7. 9	Crank Mode (open – cyclic crank; ground – continuous crank)
8. 48	Emergency Stop Indicator
9. 3	Remote Start Ground
10. 4	Remote Start (Active Low*)
11. 26	Auxiliary Indicator
12. 12	Overcrank Indicator
13. 39	Overspeed Indicator
14. 38	Low Oil Pressure Indicator
15. 36	High Engine Temperature Indicator
16. 60	System Ready Indicator
17. 80	Not In Auto Indicator
18. 40	Prealarm High Engine Temperature Indicator
19. 41	Prealarm Low Oil Pressure Indicator
20. 32	Common Fault/Prealarm
21. 63	Low Fuel (Active Low*)
22. 61	Battery Charger Fault (Active Low*)
23. 62	Low Battery Volts (Active Low*)
24. 35	Low Water Temperature

P1 Connector Pins

Terminal	Description
1.	Output to K1 Relay (Crank Relay), Wire 71
2.	Ground for Speed Sensor, Wire 2
3.	Output to Safeguard Breaker Terminal and Water Level Switch, Wire 70 (and K5 Relay if equipped with Electronic Governor)
4.	Not Used
5.	Ground (–), Wire N
6.	Speed Sensor Shield Ground, Wire S2
7.	Output to Fuel Solenoid (FS), Wire 70
8.	Battery Positive to Speed Sensor, Wire 24
9.	Input from Speed Sensor, Wire 16
10.	Not Used
11.	Not Used
12.	Input from Battery Positive (14P)
13.	Input from Auxiliary Delay Shutdown
14.	Input from Water Level Switch, Wire 31
15.	Input from Auxiliary Delay Shutdown
16.	Input from Pre-High Engine Temperature Switch, Wire 40A
17.	Input from Auxiliary Immediate (Overvoltage) Shutdown, Wire 30
18.	Input from Air Damper, Wire 56 (200-1600 kW models with Detroit Diesel engines only)
19.	Output to K6 relay, Wire 57 (200-1600 kW models with Detroit Diesel engines only)
20.	Not Used
21.	Input from High Engine Temperature Switch, Wire 34
22.	Input from Low Oil Pressure Switch, Wire 13
23.	Input from Pre Low Oil Pressure Switch, Wire 41A
24.	Input from Low Water Temperature Switch, Wire 35A

P2 Connector Pins

Terminal	Description
1.	Output to Oil Pressure Sender, Wire 70
2.	Input from Overvoltage Board, Wire 30
3.	Input for AC Crank Disconnect and Instrumentation, Wire V7F
4.	Air Damper Output (200-1600 kW models with Detroit Diesel engines only), wire 56
5.	Input for AC Crank Disconnect and instrumentation, Wire V0
6.	Engine Ground, Wire 2

P3 Connector Pins

Terminal	Description
1.	Output to Emergency Stop Lamp, Wire 48
2.	Output to Auxiliary Indicator, Wire 26
3.	Output to Overcrank Indicator, Wire 12
4.	Output to Overspeed Indicator, Wire 39
5.	Output to Low Oil Pressure Indicator, Wire 38
6.	Output to High Engine Temperature Indicator, Wire 36
7.	Output to System Ready Indicator, Wire 60
8.	Voltage (+) to Front Panel, Wire 24
9.	Output to Not In Auto Indicator, Wire 80
10.	Output to Pre High Engine Temperature Indicator, Wire 40
11.	Output to Pre Low Oil Pressure Indicator, Wire 41
12.	Output to Low Water Temperature Indicator, Wire 35
13.	Output to Low Battery Volts Indicator, Wire 62
14.	Output to Battery Charger Fault Indicator, Wire 61
15.	Output to Low Fuel Indicator, Wire 63
16.	Output to Common Alarm, Wire 32
17.	Input from Generator Master Switch, RUN position, Wire 47
18.	Input from Generator Master Switch, OFF/RESET position, Wire 43
19.	Input from Generator Master Switch, AUTO position, Wire 46
20.	Ground (–), Front Panel, Wire 2

P4 Connector Pins

Terminal	Description
1.	Input to Emergency Stop Lamp, Wire 48
2.	Input to Auxiliary Indicator, Wire 26
3.	Input to Overcrank Indicator, Wire 12**
4.	Output to Overspeed Indicator, Wire 39**
5.	Input to Low Oil Pressure Indicator, Wire 38**
6.	Input to High Engine Temperature Indicator, Wire 36**
7.	Input to System Ready Indicator, Wire 60
8.	Voltage (+) to Front Panel, Wire 24
9.	Input to Not In Auto Indicator, Wire 80
10.	Input to Pre-High Engine Temperature Indicator, Wire 40**
11.	Input to Pre-Low Oil Pressure Indicator, Wire 41**
12.	Input to Low Water Temperature Indicator, Wire 35**
13.	Input to Low Battery Volts Indicator, Wire 62
14.	Input to Battery Charger Fault Indicator, Wire 61
15.	Input to Low Fuel Indicator, Wire 63**
16.	Input to Common Alarm, Wire 32**
17.	Output from Generator Master Switch, RUN position, Wire 47
18.	Output from Generator Master Switch, OFF/RESET position, Wire 43
19.	Output from Generator Master Switch, AUTO position, Wire 46
20.	Ground (–), Front Panel

* Active low circuits may be checked for proper operation by placing ground on terminals so designated.

** Common alarm triggered by High Engine Temperature, High Engine Temperature Prealarm, Low Oil Pressure, Low Oil Pressure Prealarm, Low Water Temperature, Overcrank, Overspeed, Low Fuel, and Auxiliary Faults.

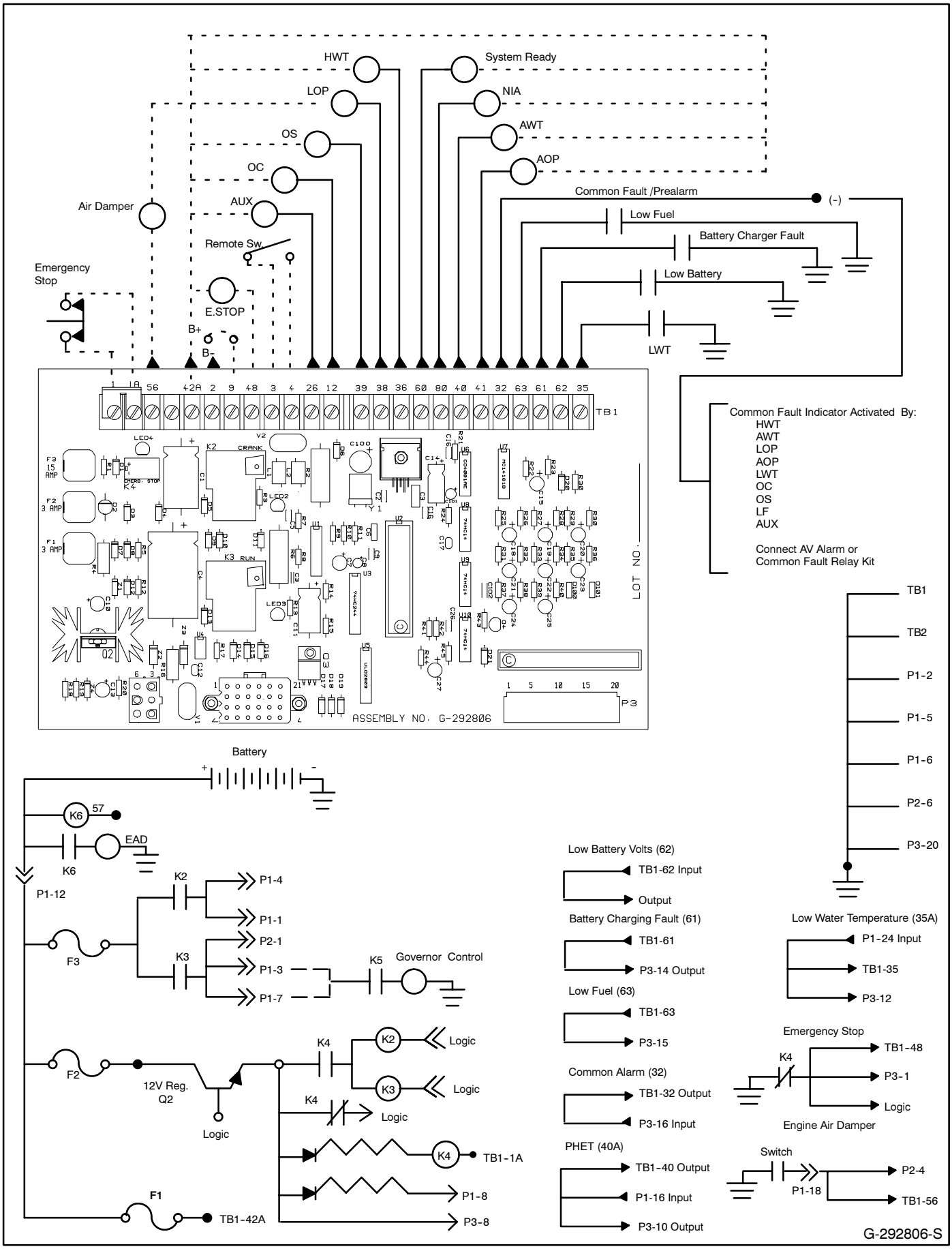

Figure 5-3. Microprocessor Controller Connections (TB1 Terminal Strip)

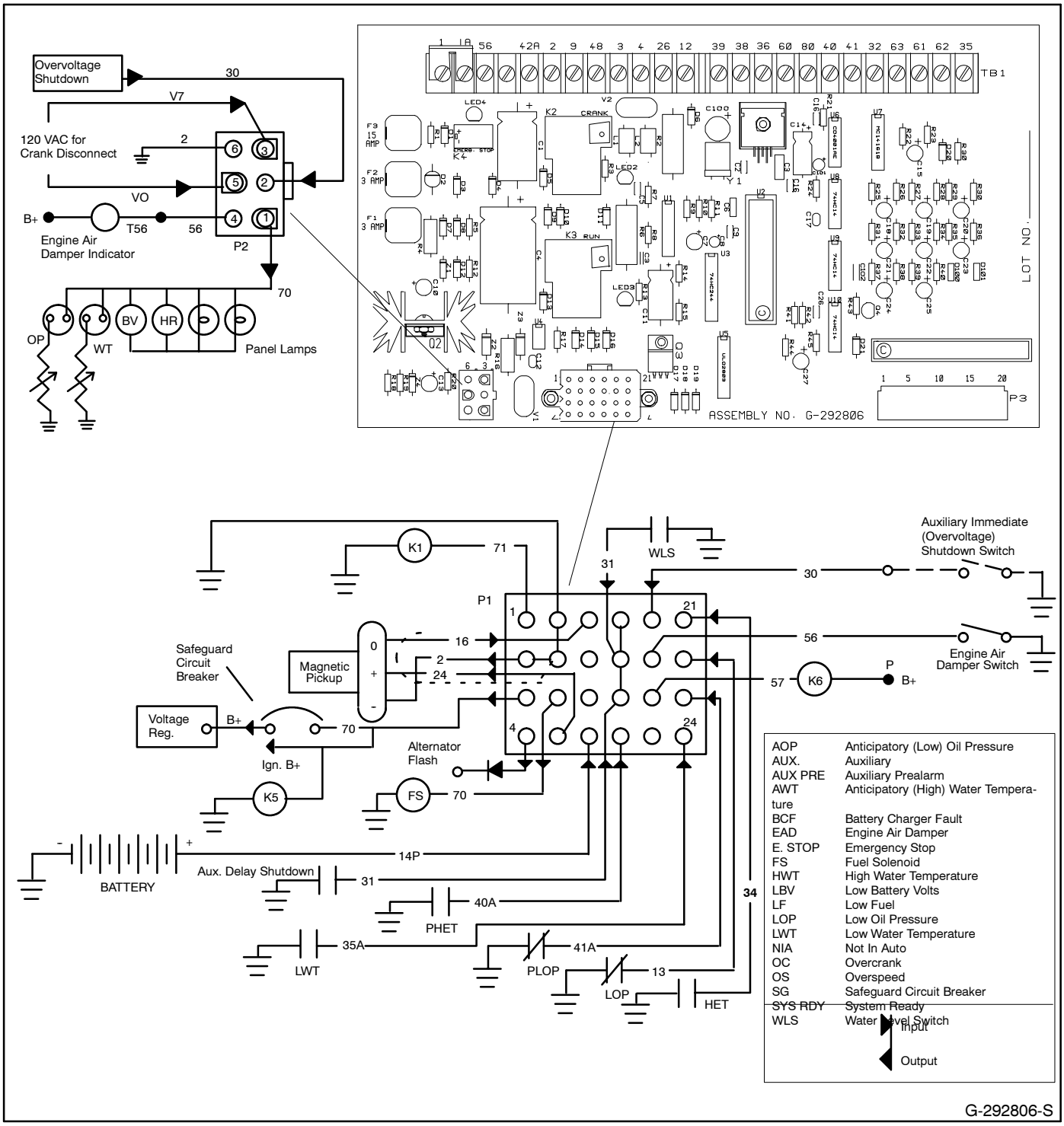

Figure 5-4. Microprocessor Controller Connections (P1 and P2)

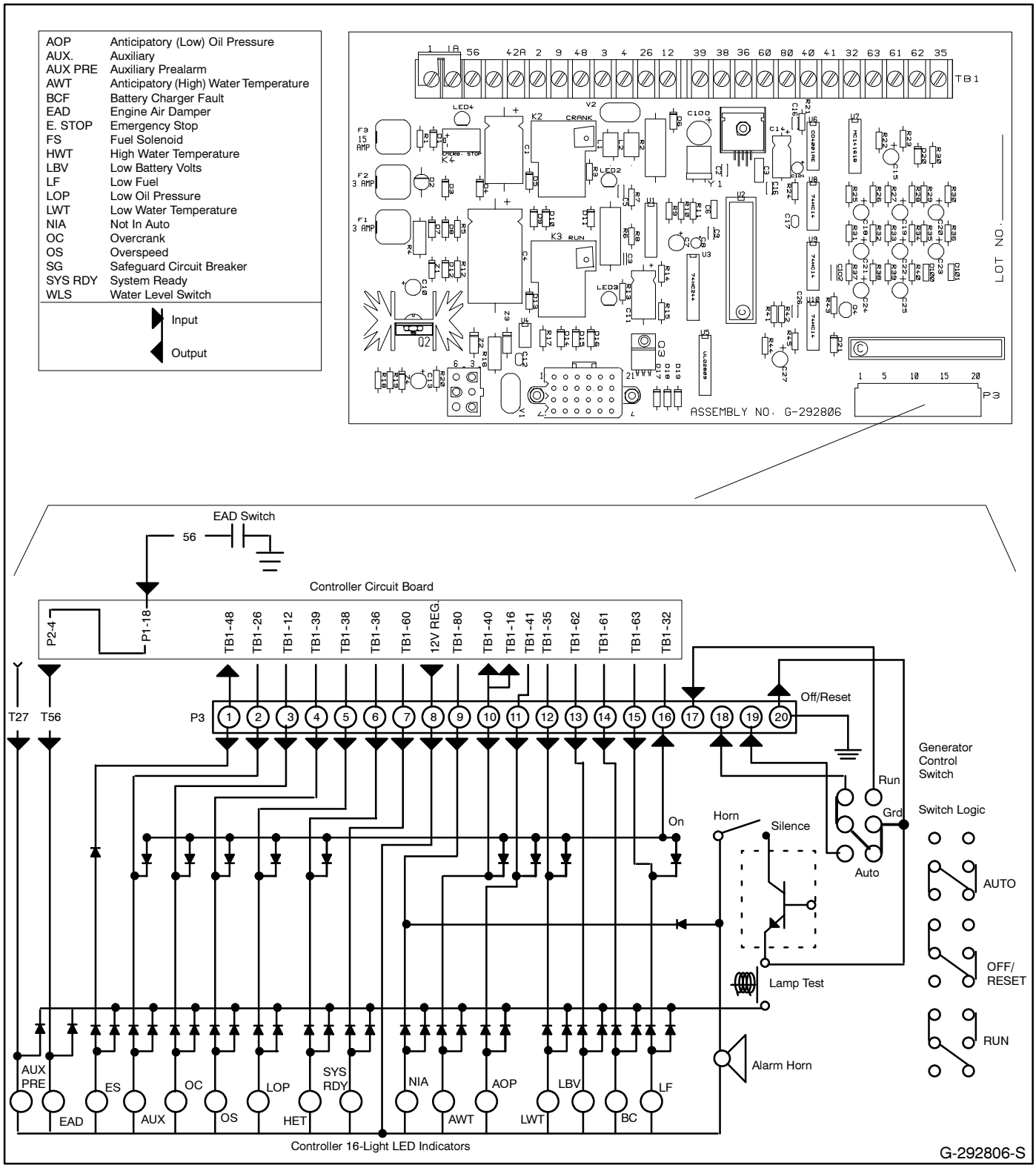

Figure 5-5. Microprocessor Controller to 16-Light LED Indicator Connections (P3)

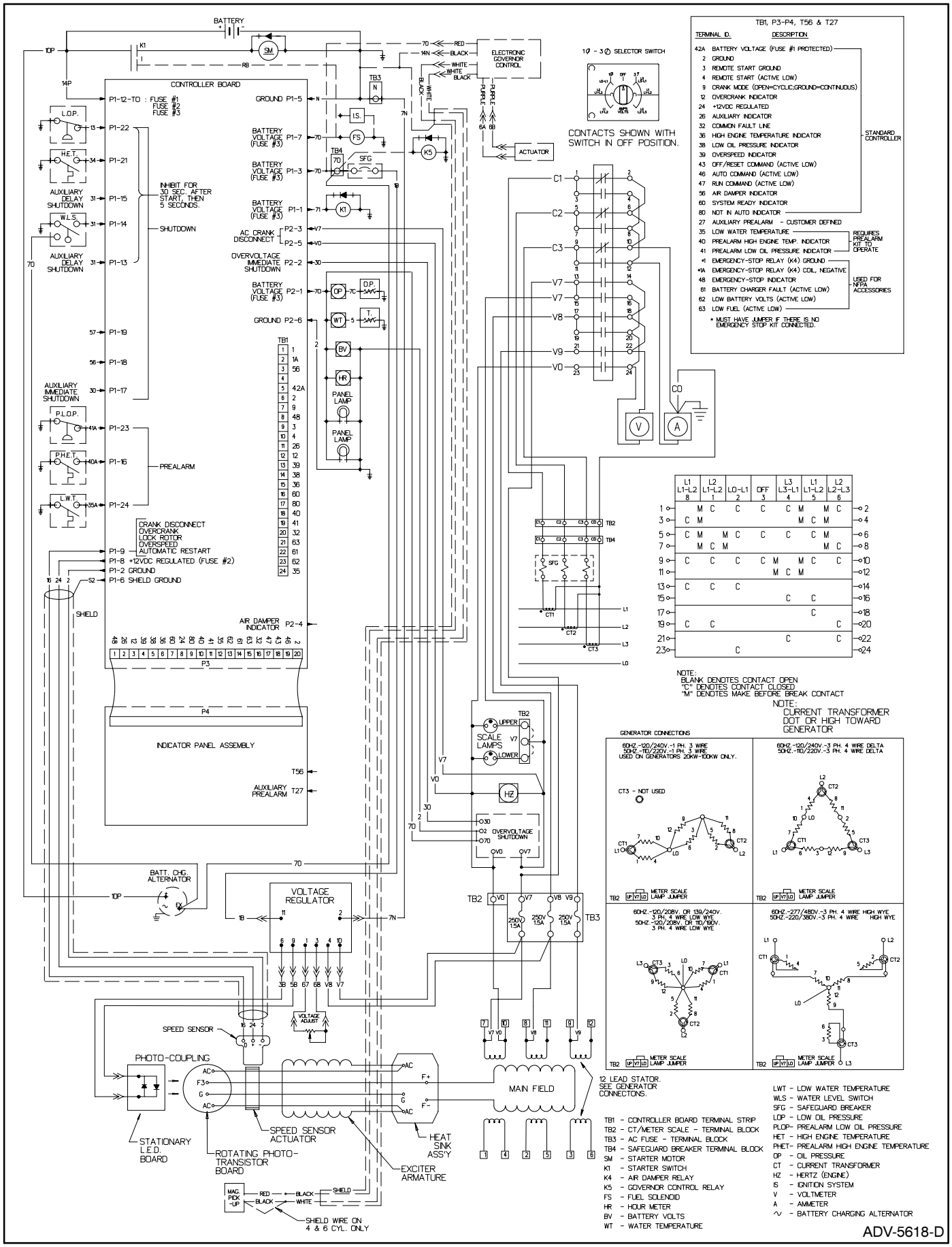

Figure 5-6. Logic Schematic, 1-Phase/3-Phase Models

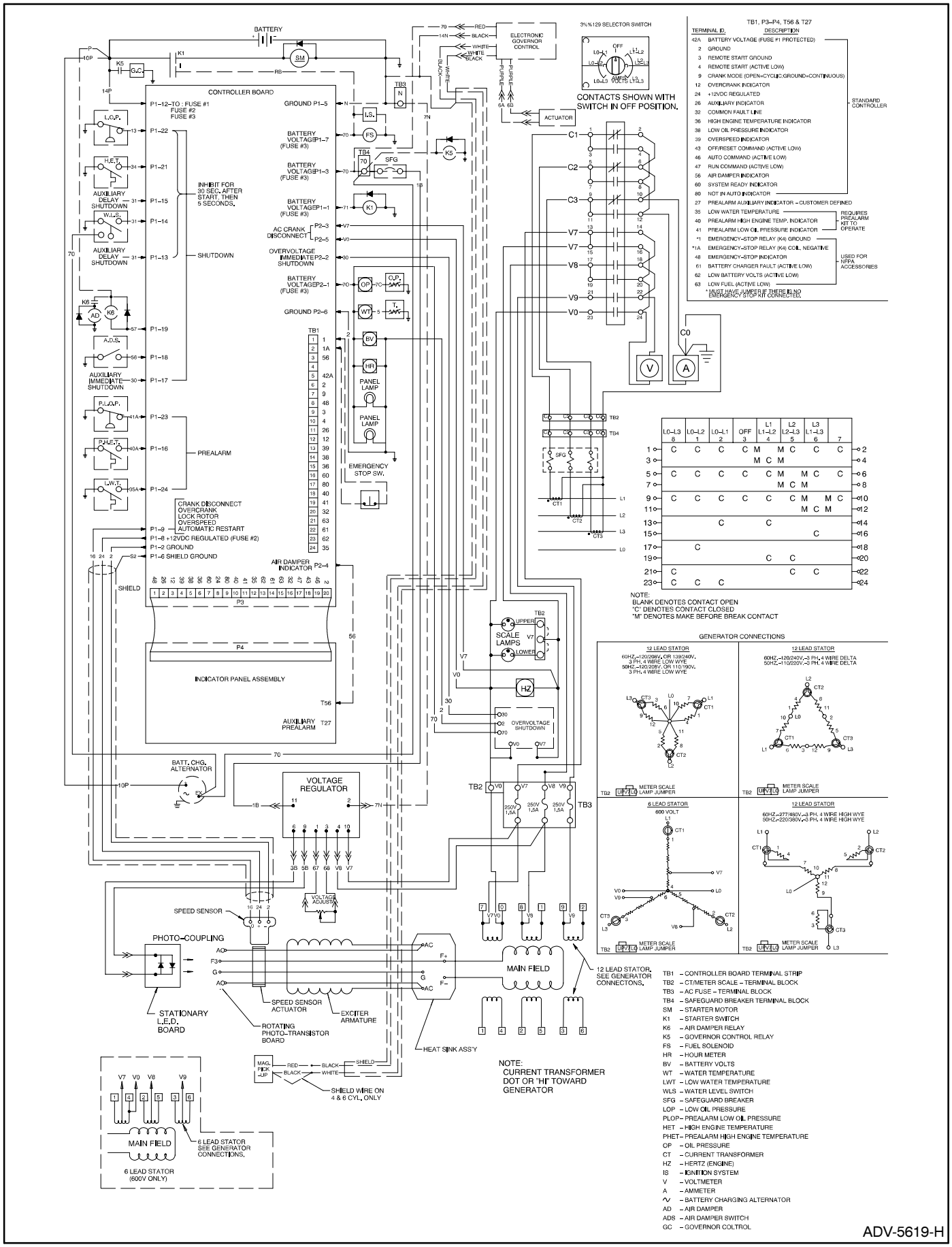

Figure 5-7. Logic Schematic, 3-Phase/600-Volt Models

Fault Shutdowns—Microprocessor Controller

If the generator set will not start or stops running due to a fault shutdown (fault lamp lit), refer to the following chart to identify fault conditions. Consult the Engine Service Manual for detailed information on correcting engine related faults. To reset the set after a fault shutdown, see Section 2—Operation.

Fault Shutdown Troubleshooting Chart

Indicator	Fault Condition/Causes
High Engine Temperature Lamp Lights	Engine coolant temperature is above shutdown range. See Section 1—Specifications for specific model
	Cooling system malfunction
Low Oil Pressure Lamp Lights	Engine oil pressure is below shutdown range. See Section 1—Specifications for specific model
Overspeed Lamp Lights	Governed frequency is in excess of 70 Hz (all models)
Overcrank Lamp Lights	Continuous cranking is more than 45 seconds
	Cyclic cranking is more than 75 seconds
	Locked rotor
Overcrank Lamp Flashes	Speed sensor signal is absent longer than one second
Auxiliary Lamp Flashes	No AC output is present
	Battery power was reconnected or was low and then came back up again while generator master switch was in the RUN or AUTO position
Auxiliary Lamp Lights	Optional emergency stop switch is reset while the generator master switch is in the RUN or AUTO position
	High oil temperature (P1-13), low coolant level (P1-14), or auxiliary delay shutdown (P1-15) faults occur (if sensor equipped)
	Overvoltage (if equipped) has occurred—voltage 15% greater than nominal voltage (for period longer than two seconds)
	Activated by customer-supplied sensing device connected to auxiliary immediate shutdown ports (P1-17 and P1-18)
	Optional emergency stop switch is activated (6-light microprocessor controller only)
	Engine low water temperature (P1-24) condition occurs (if sensor equipped). 6-light microprocessor controller only
Emergency Stop (if equipped)	Emergency stop switch is activated (local or remote)
	Emergency stop switch(es) are disconnected from controller terminals TB1-1 or 1A
Multiple Lamps Light (where illumination may only appear dim)	Main circuit board F1 (3 amp) fuse blown. F1 fuse supplies battery voltage to a remote annunciator and/or dry contact kit.

Paralleling Engine Gauge Box Controller (Switchgear)

No logic circuitry is supplied with the paralleling engine gauge box controller. The switchgear provides the logic to start and stop the generator set. Use the service literature supplied with the switchgear for troubleshooting. See the appropriate wiring diagram for available paralleling engine gauge box controller wiring diagrams.

The paralleling engine gauge box controller contains a speed switch which controls crank and overspeed adjustments. See Figure 5-8.

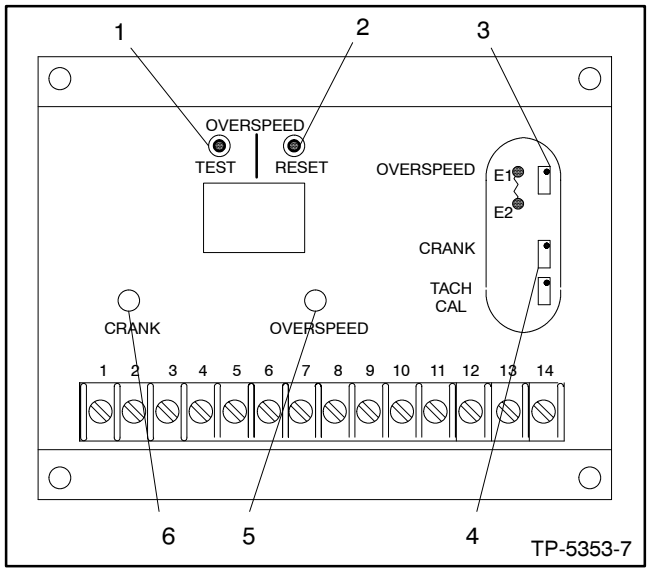

1. Overspeed Test Switch
2. Overspeed Reset Switch
3. Overspeed Adjustment Pot
4. Crank Adjustment Pot
5. Red Overspeed LED
6. Green Crank LED

Figure 5-8. Speed Switch Adjustments

Speed Switch Adjustments

The speed switch is powered by the generator set battery and the input speed signal is supplied by a magnetic pickup sensor monitoring the engine camshaft gear. As the speed of the rotating gear increases, the frequency of the AC signal from the magnetic pickup increases until each set point is surpassed. An LED lights after the speed surpasses the set point and triggers an internal relay. The set point for the speed settings are independent and are adjusted precisely with a 25-turn potentiometer. The crank adjustment feature latches when the set point has been exceeded. The overspeed adjustment feature latches and remains on until power is removed or the overspeed reset button is pushed. The test button lowers the overspeed setting by 30% which initiates a shutdown. Periodic testing during routine engine maintenance is recommended to ensure positive protection.

Crank Adjustment

Crank adjustment is made by cranking the engine and simultaneously turning crank adjustment pot slowly counterclockwise until the desired crank termination speed is reached. When the cranking termination set point is reached, the green crank LED illuminates.

The unit is factory set for manual reset. To reinitiate engine cranking, remove battery power and then reapply. Automatic reset when the engine speed falls below the cranking termination set point is done by removing the 82k-ohm resistor located between terminals E1 and E2 on the circuit board near the overspeed pot.

Overspeed Adjustment

Overspeed adjustment is made with the unit running. Increase the engine speed to 10% below the desired overspeed set point. For example: on a 60 Hz unit, the desired overspeed set point might be 70 Hz and 10% below this point is 63 Hz. See Section 7—Governors for specific engine speed adjustment information.

Turn the overspeed adjustment counterclockwise until the overspeed internal relay energizes and the red overspeed LED illuminates. Reset the overspeed relay by pressing the overspeed reset button. After the engine comes to a complete stop remove battery power from the speed switch. Reconnect power to the speed switch and readjust the engine speed to the normal operating speed using the governor adjustment procedure. The overspeed set point is tested by pressing the overspeed test button.

Troubleshooting

Apply DC power and an input speed signal to the speed switch. Connect a voltmeter to terminal 5 (+) and engine ground (–). As the speed input frequency is increased an increase in voltage is noted if functioning correctly. If the voltage is proportional to frequency, check the wiring at the terminal strip. If the voltage is not proportional to frequency, check the output of the magnetic speed sensor. If the speed sensor is operating and the terminal strip is wired correctly the speed switch is defective.

Manual Controller

The following text covers the manual controller sequence of operation during generator start, run, stop, and fault shutdown modes. Use this as a starting point for controller fault identification. The LEDs on the controller circuit board are intended to assist in the troubleshooting process. An illuminated LED indicates the respective relay is receiving power; the LED does not indicate whether that relay is energized. See Figure 5-9.

Starting

- Close the start/stop switch between N and 47.
- K2 relay is energized (LED2 lights). A set of normally open K2 contacts provide power for the oil pressure and water temperature gauges, water level sensor, panel lamps, hourmeter, voltmeter, fuel solenoid (for diesel), ignition system (for gas or gasoline), K3 relay, and overspeed/time delay circuit board.
- K3 relay normally open contacts close to energize K20 (starter solenoid).
- K20 relay normally open contacts close to engage starter motor and provide initial battery voltage to ignition system (gas/gasoline).

Running

- Stator leads V0 and V7 connected to terminals 33 and 44 provide speed sensing for overspeed shutdown.
- Once the generator is running and B1/B2 obtains the correct output voltage, K1 relay is energized (LED1 lights). After a 5-10 second time delay, K5 relay is energized (LED5 lights). Note: Voltage to the K1 and K5 relays is supplied by stator leads V0 and V7. It is reduced from 120 vac to 12 vac by a stepdown transformer. Then it is rectified and regulated to 12 volts DC by the BR1 rectifier and VR1 voltage regulator.
- One set of normally open K1 contacts close to maintain voltage to K2 (LED2 remains lit). Normally open K2 contacts remain closed to maintain voltage to engine controls.
- Another set of K4 contacts close permitting the fault lamp to function.
- A set of normally open K5 contacts close to permit low water level, engine low oil pressure, and high engine temperature shutdown switches to function. Note: All safety shutdown switches (except overspeed) are subject to a 5 second time delay during starting. TDR normally open contacts close after a 5 second delay. Overspeed shutdown is immediate and closing of K5 contacts is not required.
- A set of normally closed K1 contacts in series with the start switch open to de-energize K3 (LED3 goes out). K3 normally open contacts open to de-energize the starter motor and initial battery voltage to the ignition system (gas/gasoline). When K1 normally open contacts open it provides protection against accidental reenergizing the starter motor.
- When the unit is running, the start switch contacts between N and 47 are opened by releasing the start/stop rocker switch.

Stopping

- Close the stop switch between N and 43.
- K4 relay is energized (LED4 lights).
- Normally closed K4 contacts open and de-energize the ignition system (gas/gasoline) or fuel solenoid (diesel).
- Normally open K4 contacts close to maintain a ground connection to the K4 relay until the unit comes to a complete stop.
- Fault lamp is energized until the generator speed and voltage decrease enough to de-energize the K1 relay. K1 normally open contacts open and the fault lamp turns off.

Engine Safety Shutdown Switches

Engine Overspeed (Overspeed/ Time Delay Circuit Board)

- The overspeed relay (SDR) receives its power when K2 normally open contact closes during starting and running.
- The overspeed relay receives its sensing source (frequency) from stator leads V0 and V7 at terminals 33 and 44.
- An overspeed (overfrequency of 70 Hz or greater) at terminals 33 and 44 will cause the SDR normally open contact to close and energize K4 relay (LED4 lights).
- Normally closed K4 contacts open to de-energize the ignition system (gas/gasoline) or fuel solenoid (diesel).
- Normally open K4 contacts close to maintain a ground connection to the K4 relay until the unit comes to a complete stop.
- Fault lamp is energized until the generator speed and voltage decreases enough to de-energize K1 relay. K1 normally open contacts open and the fault lamp turns off.

Low Oil Pressure, High Engine Temperature, or Low Water Level Shutdown

- Safety shutdown switch contacts close and energize the K4 relay (LED4 lights). Note: During cranking Time Delay Relay (TDR) relay will cause a five second time delay before shutdown occurs. This is allows the engine to reach normal operating engine oil pressure.
- Normally closed K4 contacts open to de-energize the ignition system (gas/gasoline) or fuel solenoid (diesel).
- Normally open K4 contacts close to maintain a ground connection to the K4 relay until the unit comes to a complete stop.
- Fault lamp is energized until the generator speed and voltage decreases enough to de-energize K1 relay. K1 normally open contacts open and the fault lamp turns off.

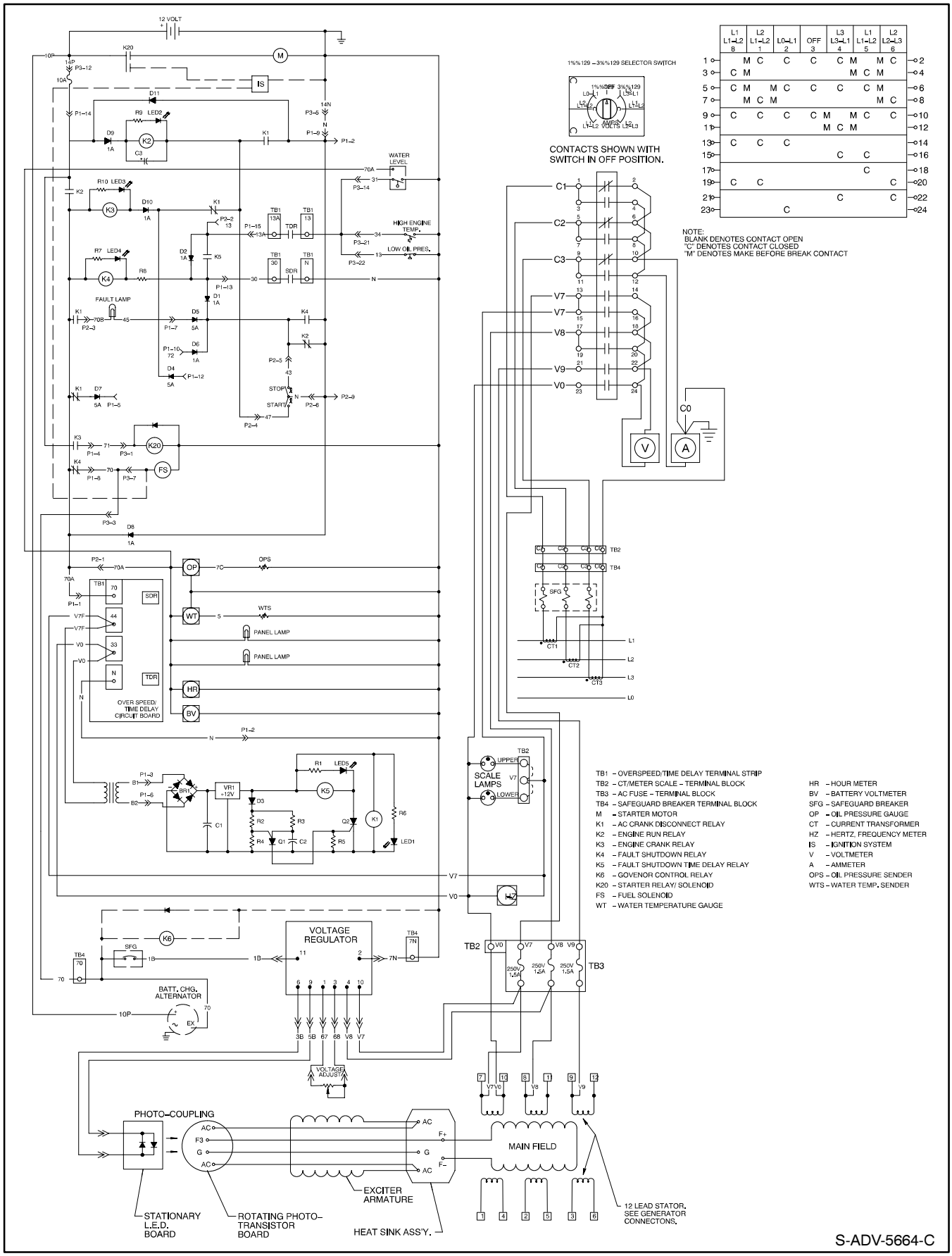

Figure 5-9. Manual Controller

Section 6. Generator/Controller Troubleshooting

Microprocessor Controller

Relay Descriptions

A description of the controller and generator relays is given below. Use this information in troubleshooting the generator set and in conjunction with the Troubleshooting Microprocessor Controller flow charts on the following pages. Use the troubleshooting section following and the appropriate wiring diagram for additional information.

K1 Relay (Starter Solenoid)

- Energizes starter; K1 relay is located on engine. See Figure 6-1.

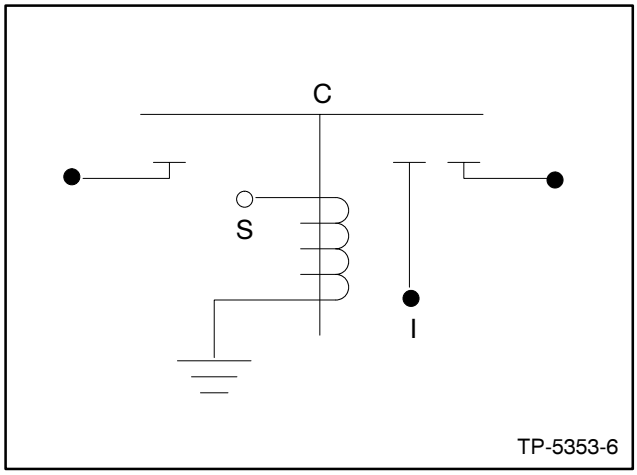

Figure 6-1. Starter Solenoid

K2 Relay (Crank Relay on Main Circuit Board)

- Energizes K1 Relay. LED2 lights when energized during crank mode. K2 relay is located on controller circuit board. See Figure 6-2.

K3 Relay (Run Relay on Main Circuit Board)

- Energizes ignition, fuel solenoid, fuel pump, choke, and instrumentation.
- Energizes generator voltage regulator, LED3 lights when energized during crank and run modes. K3 relay is located on controller circuit board.

K4 Relay (Emergency Stop Relay on Main Circuit Board)

- The K4 relay is energized continuously except during emergency stop conditions. LED4 is lit at all times except during emergency stop. K4 relay is located on controller circuit board. If emergency stop kit is connected (local or remote), remove jumper from circuit board TB1-1 and 1A. If no emergency stop kit is connected, a jumper must connect terminals TB1-1 and 1A. See Figure 6-2.

K5 Relay (Governor Control Relay)

- Energizes engine governor control circuit. Relay is located in generator junction box.

K6 Relay (Air Damper Relay)

- Energizes air damper solenoid for emergency stop on 200-1600 kW models with Detroit Diesel engines only. K6 relay is located in generator junction box.

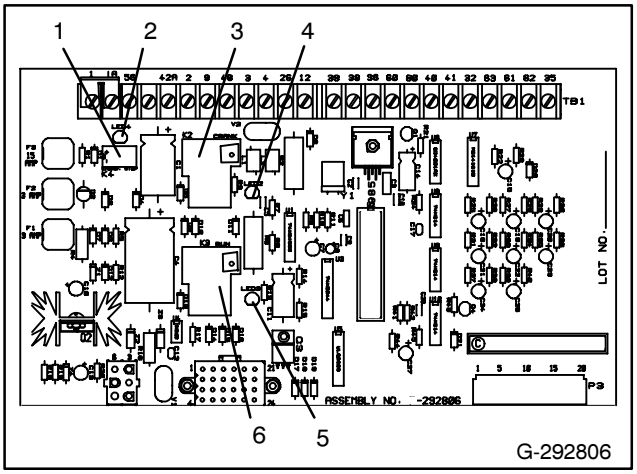

1. K4 Relay
2. LED4
3. K2 Relay
4. LED2
5. LED3
6. K3 Relay

Figure 6-2. Main Circuit Board Relays

Troubleshooting Microprocessor Controller

Use the following charts as a quick reference in troubleshooting individual problems. Consult the first chart for aid in locating the cause of blown fuses. In the successive charts, generator faults are listed by specific groups and correlated with possible causes and corrective action. Before beginning any troubleshooting procedure, read all safety precautions at the beginning of this manual and those included in the text. Do not neglect these precautions.

⚠ WARNING

Hazardous voltage.

Moving rotor.

Can cause severe injury or death.

Do not operate generator set without all guards and electrical enclosures in place.

Hazardous voltage can cause severe injury or death. Whenever electricity is present, there is the hazard of electrocution. Open main circuit breaker on all power sources before servicing equipment. Electrically ground the generator set and electrical circuits when in use. Never come into contact with electrical leads or appliances when standing in water or on wet ground, as the chance of electrocution is increased under such conditions.

⚠ WARNING

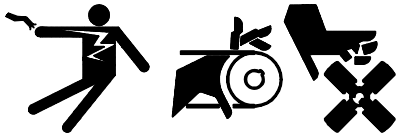

Accidental starting.
Can cause severe injury or death.

Disconnect battery cables before working on generator set (negative lead first and reconnect it last).

Accidental starting can cause severe injury or death. Turn generator set master switch to OFF position, disconnect power to battery charger, and remove battery cables (remove negative lead first and reconnect it last) to disable generator set before working on any equipment connected to generator set. The generator set can be started by automatic transfer switch or remote start/stop switch unless these precautions are followed.

NOTE

If starting unit by remote switch, verify proper operation of remote switch before troubleshooting controller. Test remote switch operation by placing generator master switch in the AUTO position and running a jumper between terminals 3 and 4 on controller circuit board. If the generator does not start, proceed with the controller troubleshooting procedure outlined in the following pages.

To quickly check the condition of the components mentioned to in the following flowcharts, use an ohmmeter to read resistance between the designated terminal and ground. See Figure 6-3. With ohmmeter on the R x 1 scale, a reading of less than one ohm (continuity) indicates that component may be defective. Isolate the defective component and repair or replace.

Checking P1 and P2 Connections

Component	Connect between ground and terminal:
Engine Gauges	Connector P2, pin 1
Overvoltage Circuit Board	Connector P2, pin 2
Crank (K1 Relay) Circuit	Connector P1, pin 1
(Diesel) Fuel Solenoid CIrcuit	Connector P1, pin 7

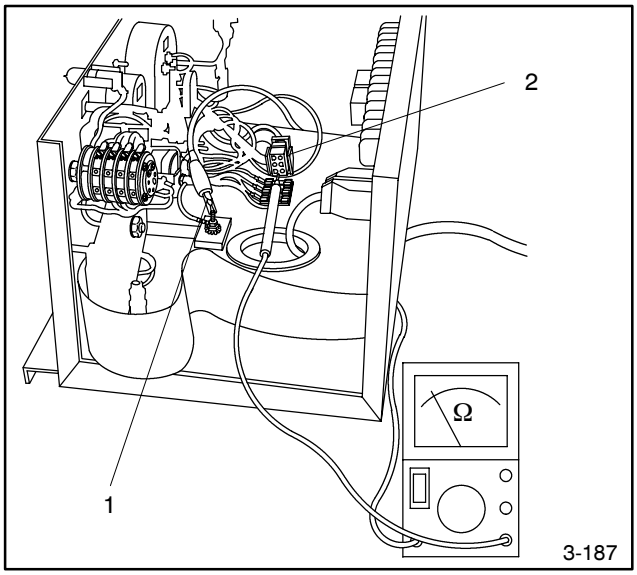

1. Ground Connection
2. P2 Connection

Figure 6-3. Checking P1 and P2 Connections

Fuses

The chart following lists the possible causes of blown controller fuses F1, F2, and F3. If a fuse is blown, replace it and resume operation. If the fuse blows again, use the chart to identify the faulty component(s).

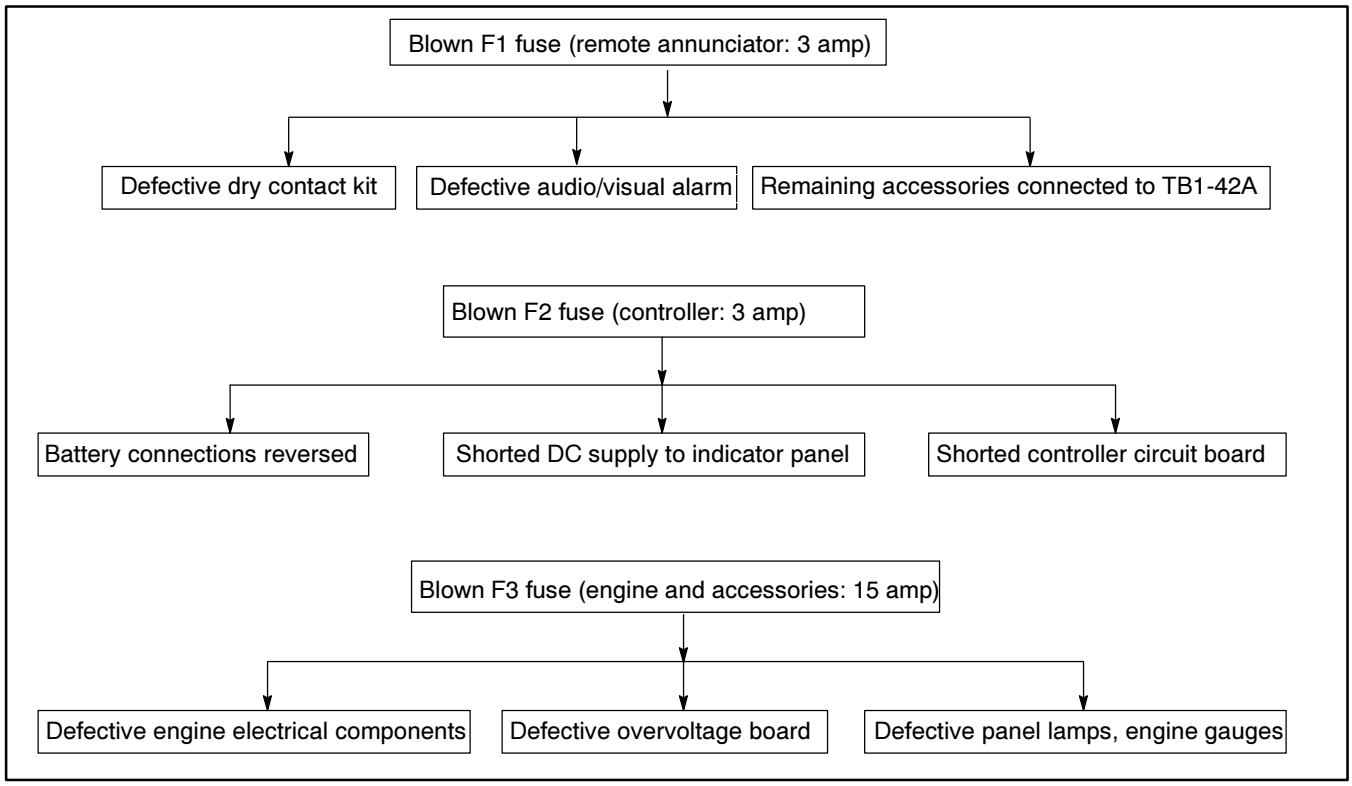

Engine Will Not Crank

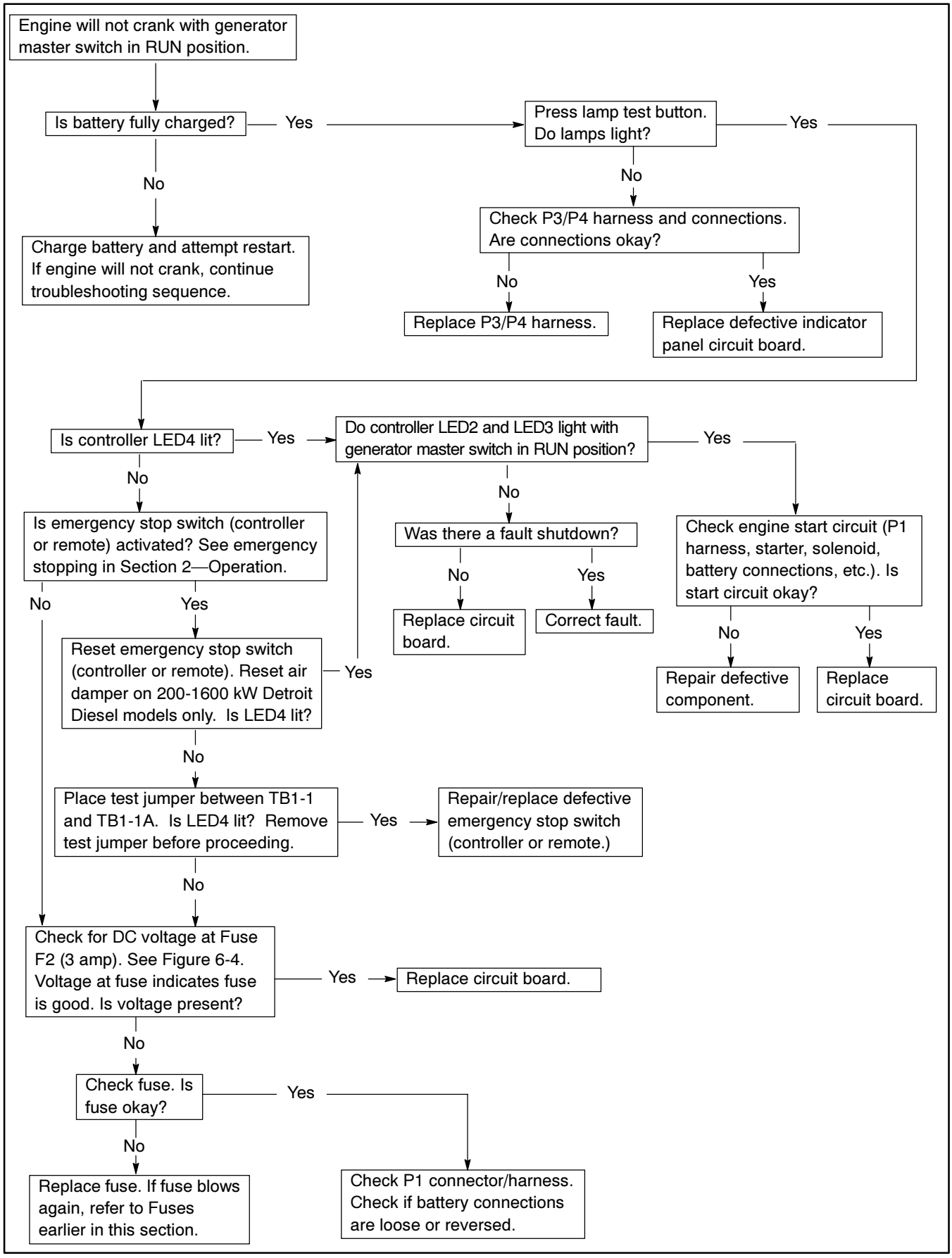

Engine Cranks, But Will Not Start

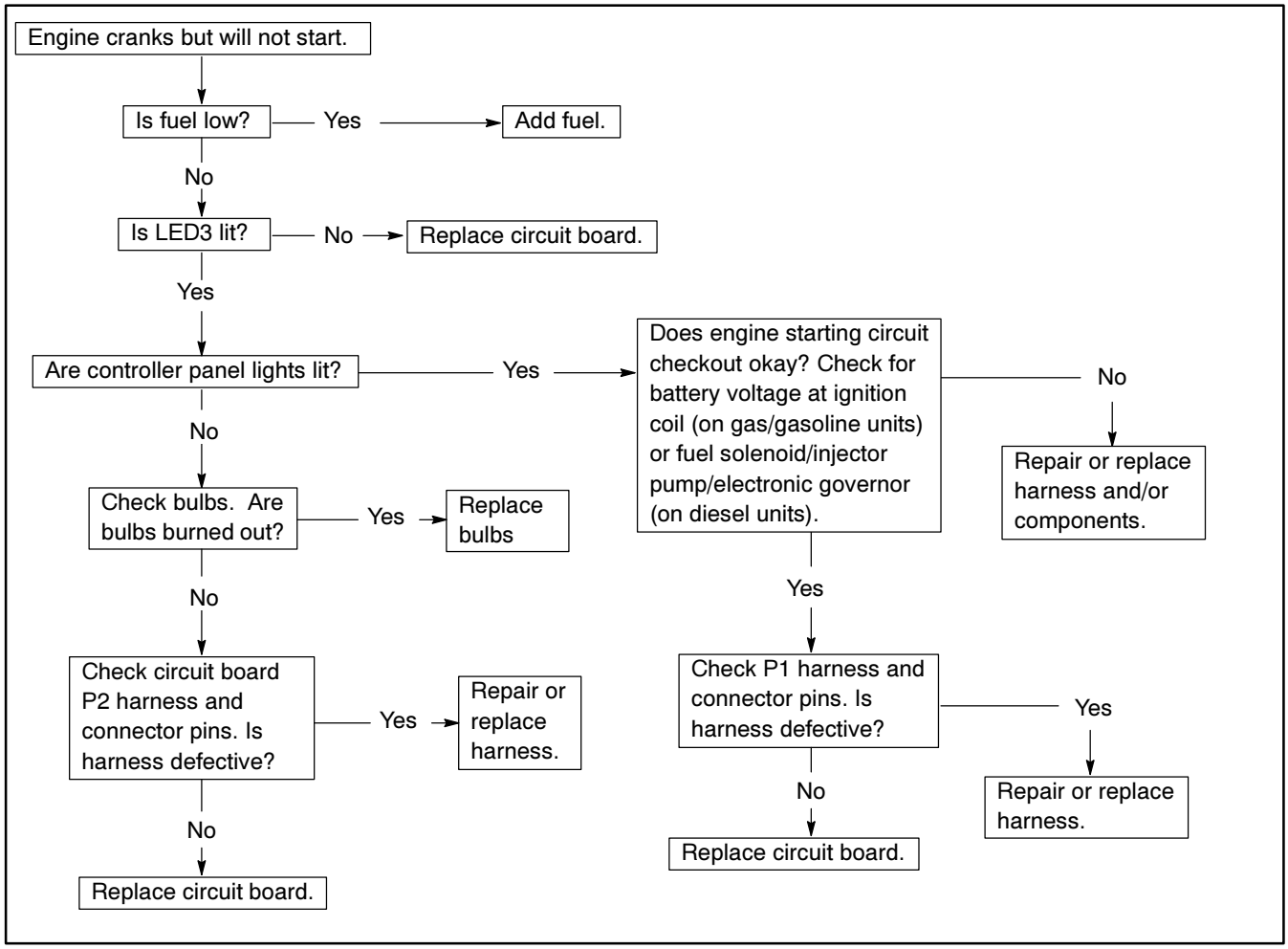

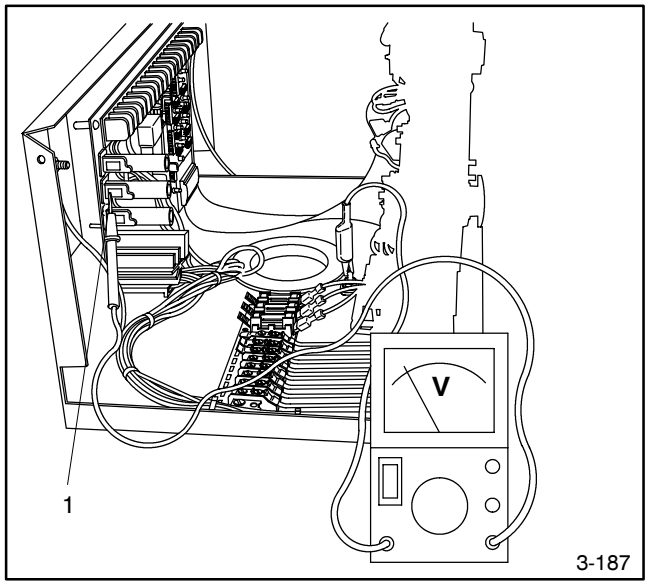

1. Fuse Terminal

Figure 6-4. Checking Condition of Fuse F2

Controller Instrumentation

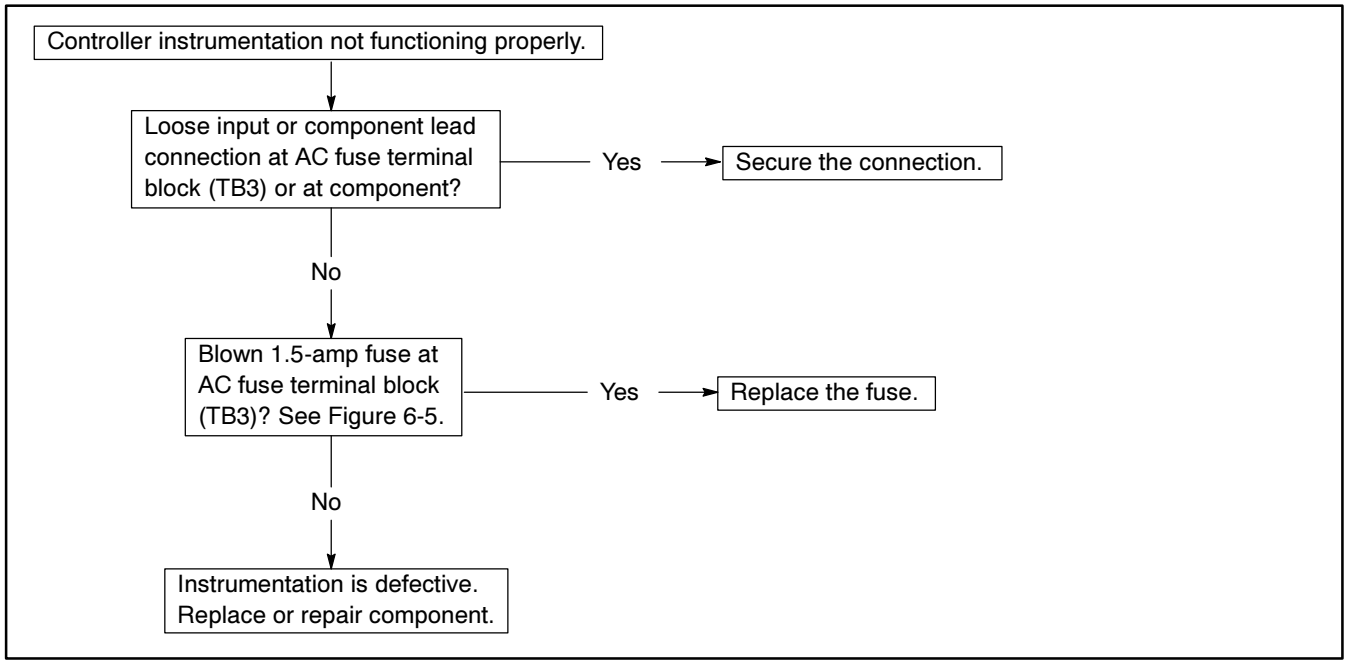

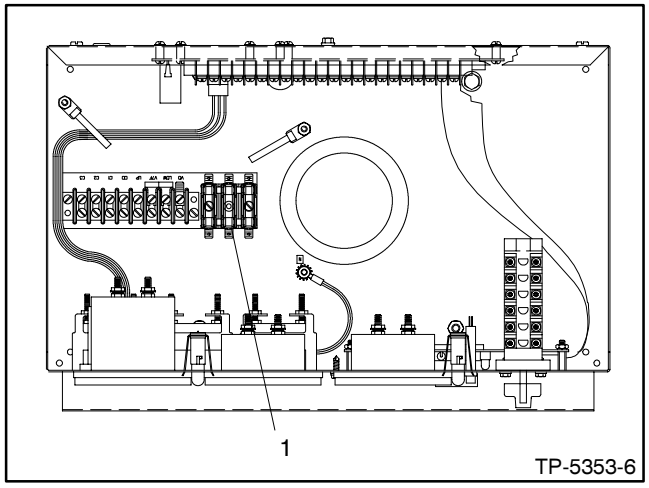

1. AC Fuse Terminal Block

Figure 6-5. AC Fuse Terminal Block

Lamp Circuit Board

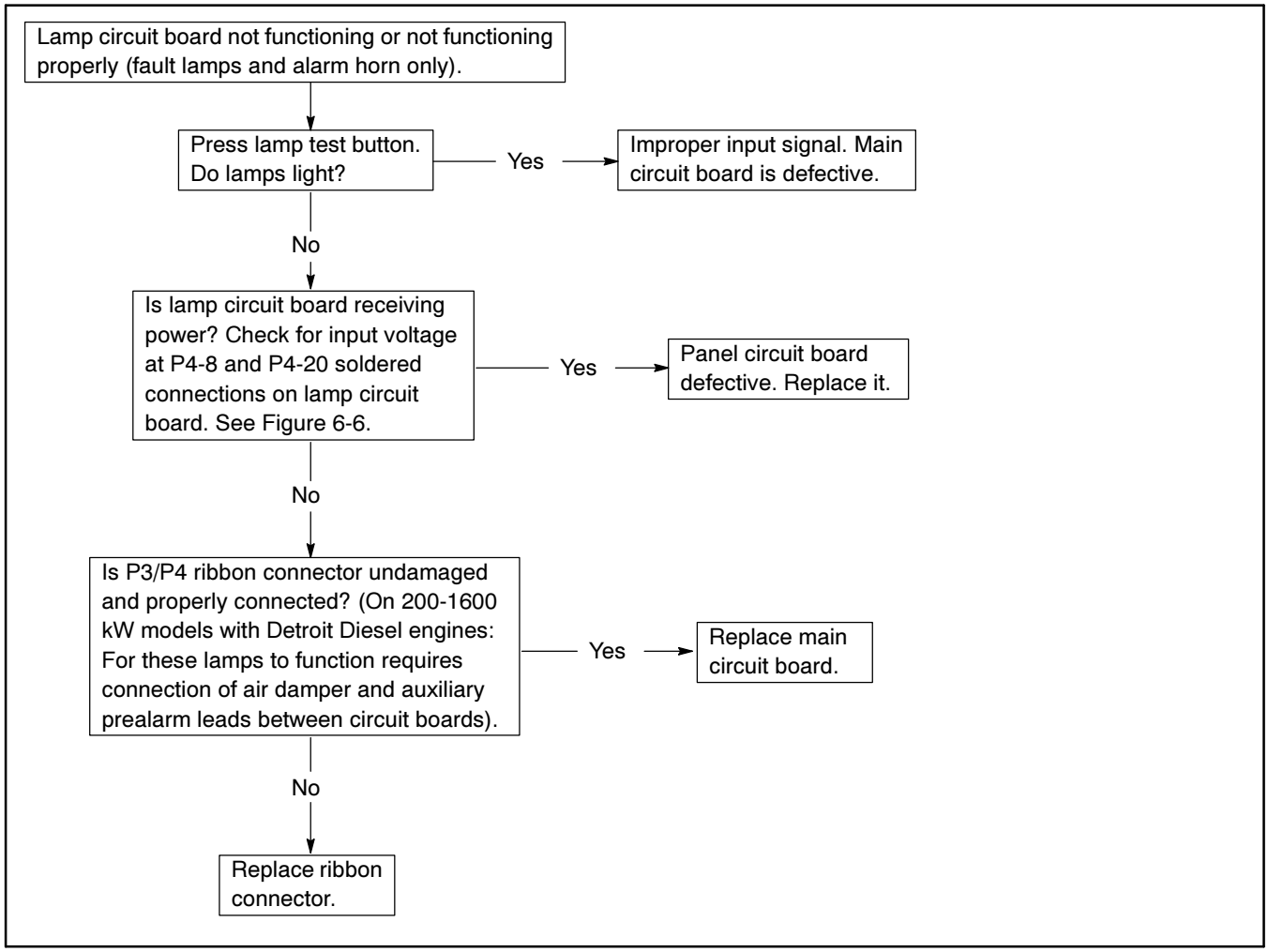

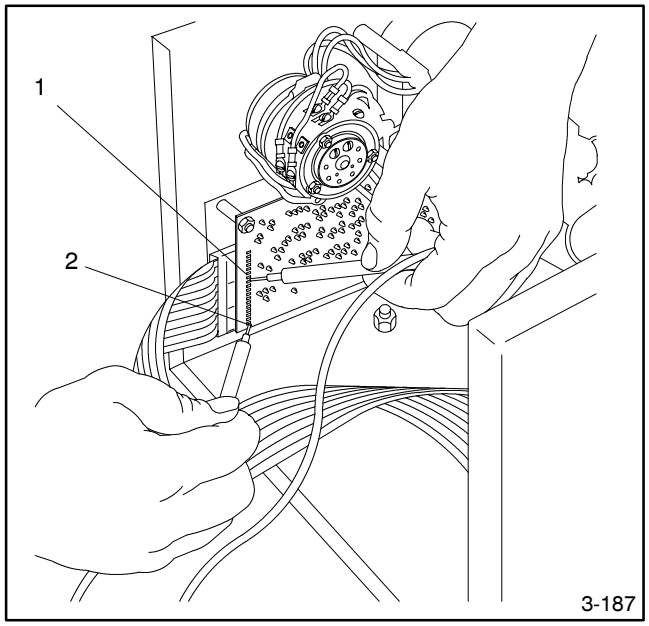

1. P4-8 (+) Connection
2. P4-20 (–) Connection

Figure 6-6. Checking Input to Lamp Circuit Board

Overcrank Lamp

Engine starts and runs, but overcrank lamp flashes.

NOTE: The overcrank lamp will flash if speed sensor signal is absent longer than one second.

↓

Excessive speed sensor air gap? — Yes → Adjust speed sensor air gap to 0.014-0.028 in. (0.36-0.71 mm). See Figure 6-7.

↓ No

Open speed sensor circuit? Check continuity of wire 2 (black), wire 16 (white), and wire 24 (red) between P1 connector and speed sensor. Check for 8-10 volts DC across speed sensor (+) positive terminal and (–) negative terminals. Check wire 16 for 3-6 volts DC, and wire 24 for 8-10 volts DC. Does test check out okay? — Yes → Defective speed sensor. See Speed Sensor Test in this section.

↓ No

Repair circuit.

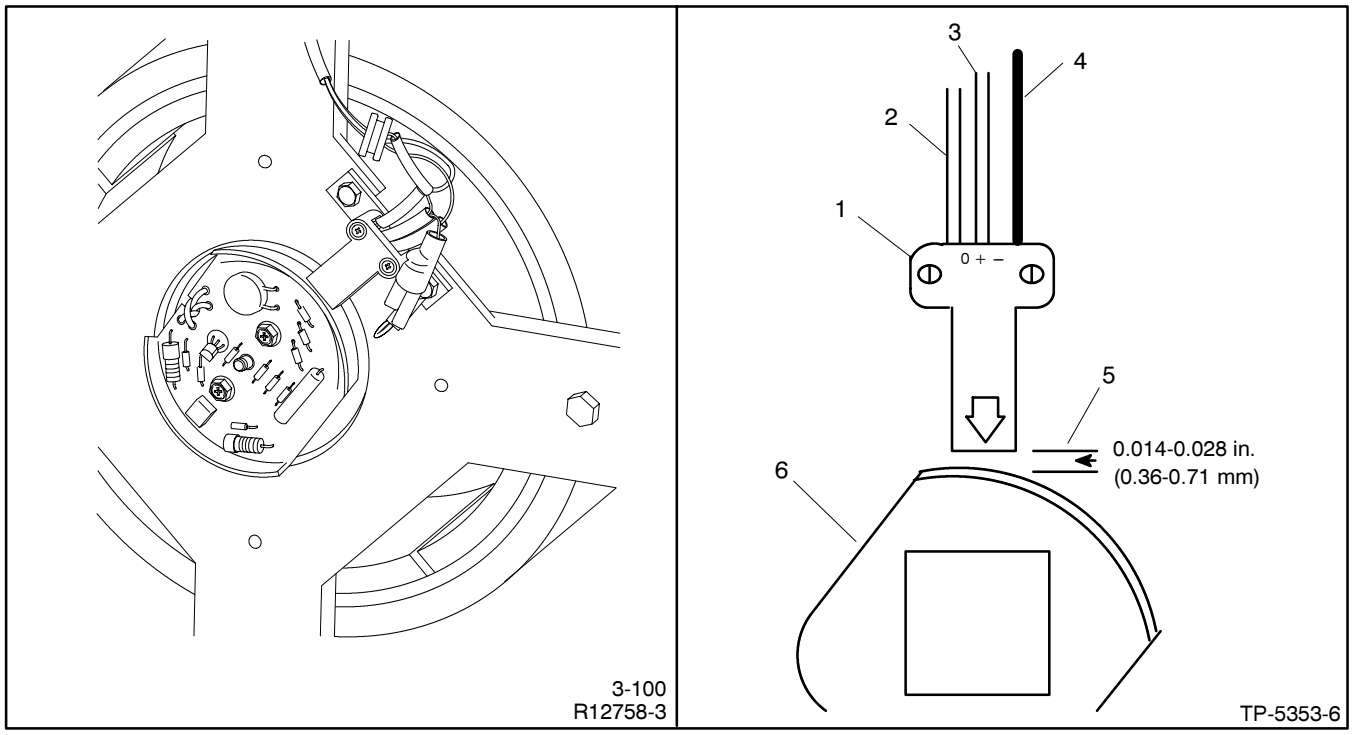

1. Speed Sensor
2. Wire 16: White/Clear
3. Wire 24: Red
4. Wire 2: Black
5. Air Gap: 0.014-0.028 in. (0.36-0.71 mm)
6. Actuator Cup

Figure 6-7. Speed Sensor Air Gap

FASTCHECK® Features and Operation

The FASTCHECK® is an engine simulator for testing and troubleshooting the microprocessor controller.

Features

Features are shown in the following paragraphs, see Figure 6-8 for illustration. Engine conditions are simulated by the following engine switch position:

- **OFF**—locked engine (starter energized but not turning)
- **CRANK**—engine cranking, but not started
- **RUN**—engine running

Indicator Lamps

IGN—(ignition) lamp:

- shows battery voltage supplied to ignition (gas/gasoline) or fuel solenoid (diesel), fuel valves, water valve (city-water cooled sets)
- lights during cranking and running

CRK—(crank) lamp:

- shows battery voltage switched to starter (engine not necessarily turning)
- lights only during on-crank cycles

REG—(regulator) lamp:

- shows battery voltage supplied to generator set's AC voltage regulator
- lights only during cranking and running

BATT—(battery) lamp:

- shows lights when test battery(ies) or DC power supply is live and properly connected

NOTE

L.O.P., H.W.T., and OVERSPEED simulate malfunctions causing engine to shut down. L.O.P and H.W.T. circuits will start timing after engine has been running for 30 seconds. Engine shutdown should occur 5 seconds after pushing fault switch.

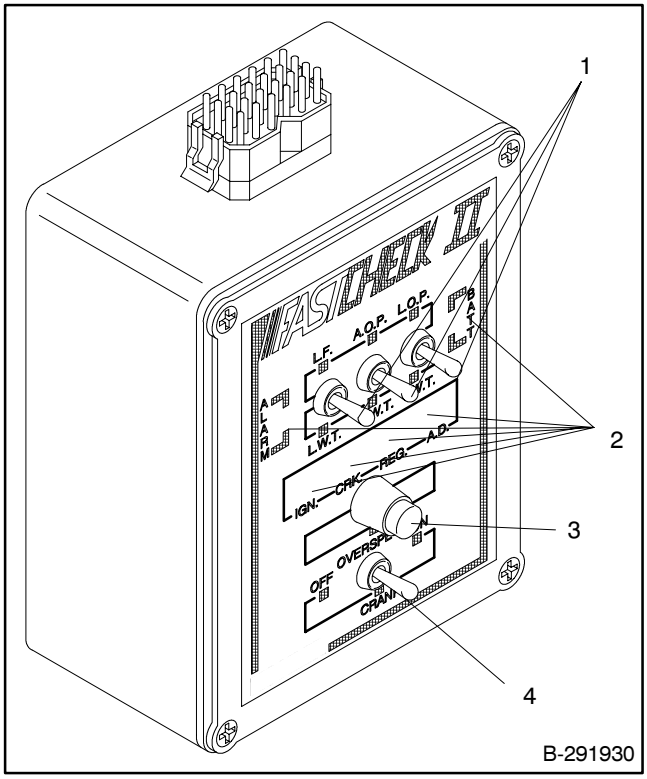

1. Toggle Switches
2. Indicator Lamps
3. Overspeed Button
4. Engine Switch

Figure 6-8. FASTCHECK® Simulator

Switches

L.O.P.—low oil pressure

H.W.T.—high water (engine) temperature

OVERSPEED—simulates a 70 Hz overspeed condition

L.F.—low fuel (not used for testing)

L.W.T.—low engine water temperature

A.O.P.—anticipatory (low) oil pressure

A.W.T.—anticipatory (high) water temperature

Operation

Use the FASTCHECK® to test the microprocessor controller on the generator set when troubleshooting start-up problems, or to test and troubleshoot the controller when removed from the generator set.

To operate the FASTCHECK® the following equipment is required:

- FASTCHECK® simulator (B-291930) and harness (255915).
- Variable low-voltage DC power supply; 0-30 volt, 3 amp minimum current, 0.5% maximum output voltage ripple at 30 volts DC. A 12- or 24-volt battery (depending on system voltage) can also be used to operate the FASTCHECK®.

NOTE

The 200-300 kW diesel-powered models use a 24-volt battery system.

To Connect/Operate the FASTCHECK® Tester

1. Unplug DC engine harness from DC harness connector (P1). See Figure 6-9.
2. Connect FASTCHECK® harness to DC harness connector (P1) and top of FASTCHECK®.
3. Move generator master switch to OFF/RESET position.
4. Move FASTCHECK® engine switch to OFF.
5. Clip red (+) and black (–) harness leads to battery(ies) or DC power supply of proper voltage for generator set (12 or 24 volt). Adjust output voltage to 1-2 volts above battery voltage when using a DC power supply. See BATT rating on generator nameplate. Use generator set battery(ies) if accessible and fully charged.

NOTE

Circuit board damage will occur if correct polarity is not observed when connecting FASTCHECK®.

NOTE

Due to the absence of AC output, the auxiliary lamp will flash during controller testing on 16-light microprocessor controllers. On 6-light controllers the low water temperature/auxiliary lamp will flash. The NOT IN AUTO lamp is illuminated whenever the generator master switch is not in the AUTO position on 16-light microprocessor controllers.

6. Move generator master switch to RUN position. Move FASTCHECK® engine switch to CRANK. FASTCHECK® IGN., CRK., and REG. lamps should light. The generator controller will cause the engine to crank until the FASTCHECK® switch is moved to RUN (or OVERCRANK shutdown appears on generator controller).
7. Move the FASTCHECK® engine switch to RUN. CRK. lamp should go out and REG. and IGN. lamps should stay on.
8. Simulate engine malfunctions by pressing FASTCHECK® fault switches. Corresponding fault lamp on controller should light during each simulated engine malfunction.

NOTE

Leave FASTCHECK® engine switch in RUN position for at least 30 seconds before pushing toggle switches. Toggle generator master switch to OFF/RESET and FASTCHECK® engine switch to OFF, then back to RUN after simulated fault shutdowns.

9. Procedures to test overcrank circuitry, speed sensor circuitry, and generator condition indicators are described later in this section.

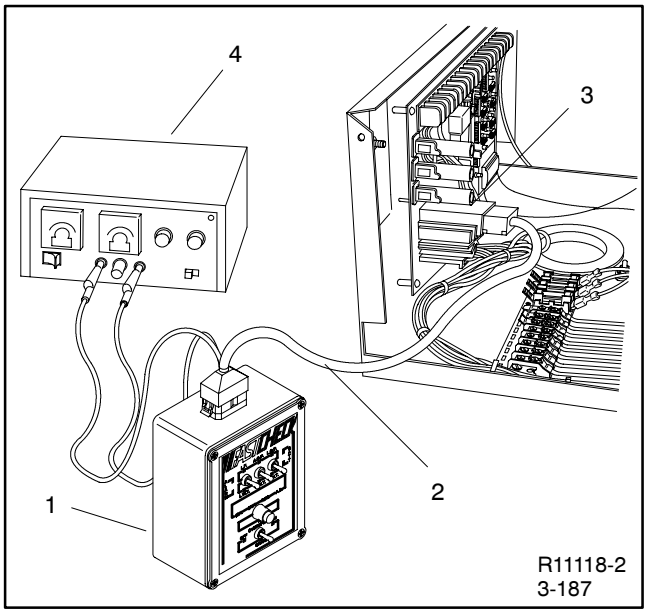

1. FASTCHECK®
2. Wiring Harness
3. DC Harness Connector
4. DC Power Supply

Figure 6-9. FASTCHECK® Connections

Overcrank

To test the controller's ability to:

- Detect a locked engine.
- Stop a start-up attempt if the starter locks or will not engage.

1. Move FASTCHECK® engine switch to OFF.
2. Move generator master switch to OFF position and then move switch to RUN position.
3. IGN., CRK., and REG. lamps on FASTCHECK® should light for approximately 5 seconds and then go out. 5 seconds later the IGN., CRK.,and REG. lamps should relight for 5 seconds before going out again (15 seconds total elapsed time). Controller OVERCRANK lamp lights. Check for operating voltage between TB1-42A (+) and TB1-12 (–).
4. This test verifies the proper operation of the engine overcrank circuit. If the OVERCRANK shutdown fails to function, check the speed sensor and related circuitry. See Controller Speed Sensor Circuitry following and Speed Sensor Test in Section 7—Component Testing and Adjustment.

Controller Speed Sensor Circuitry

To check the controller's ability to respond to signals from the speed sensor, perform the following test:

1. Move generator master switch to OFF/RESET position.
2. Move FASTCHECK® engine switch to OFF position.
3. Move generator master switch to RUN position. Observe IGN., CRK., and REG. lamps light.
4. Within 5 seconds, move FASTCHECK® engine switch to RUN.
5. If CRK. lamp goes out on FASTCHECK®, the controller speed sensor circuitry is functioning correctly.

Generator Condition Indicator Terminal (TB1 Terminal Strip)

Remote accessories (A/V alarm, remote annunciator, dry contact kits, etc.) may be connected to the controller TB1 terminal strip to signal the condition of the generator set. (Some generator sets may not be equipped with the optional sending devices necessary to operate all generator condition indicators.) If remote accessories will not operate, test for output voltage at the TB1 terminal strip. To test the operation of each indicator, move the generator master switch and FASTCHECK® toggle in the position prescribed. Test point voltage is slightly less than the voltage being supplied to the controller (12 or 24 volts). If correct voltage is not detected at the test point, remote accessories (A/V alarm, remote annunciator, dry contact kits, etc.) will not function. Test point connections are shown in Figure 6-10 and the chart titled Generator Condition Indicator Terminals.

NOTE

When checking controller test point voltage, place negative (–) lead of voltmeter on terminal designated in the chart (and) and voltmeter positive (+) lead on TB1-42A.

NOTE

Due to the absence of AC output, the auxiliary lamp will flash during controller testing on 16-light microprocessor controllers. On 6-light controllers the low water temperature/auxiliary lamp will flash. The NOT IN AUTO lamp is illuminated whenever the generator master switch is not in the AUTO position on 16-light microprocessor controllers.

NOTE

Leave FASTCHECK® engine switch in the RUN position for at least 30 seconds before pushing toggle switches. Toggle generator master switch to OFF/RESET position. Move the FASTCHECK® engine switch to OFF position. Move generator master switch to RUN position. Observe IGN., CRK., and REG. lamps light. Within 5 seconds, move the FASTCHECK® engine switch to RUN.

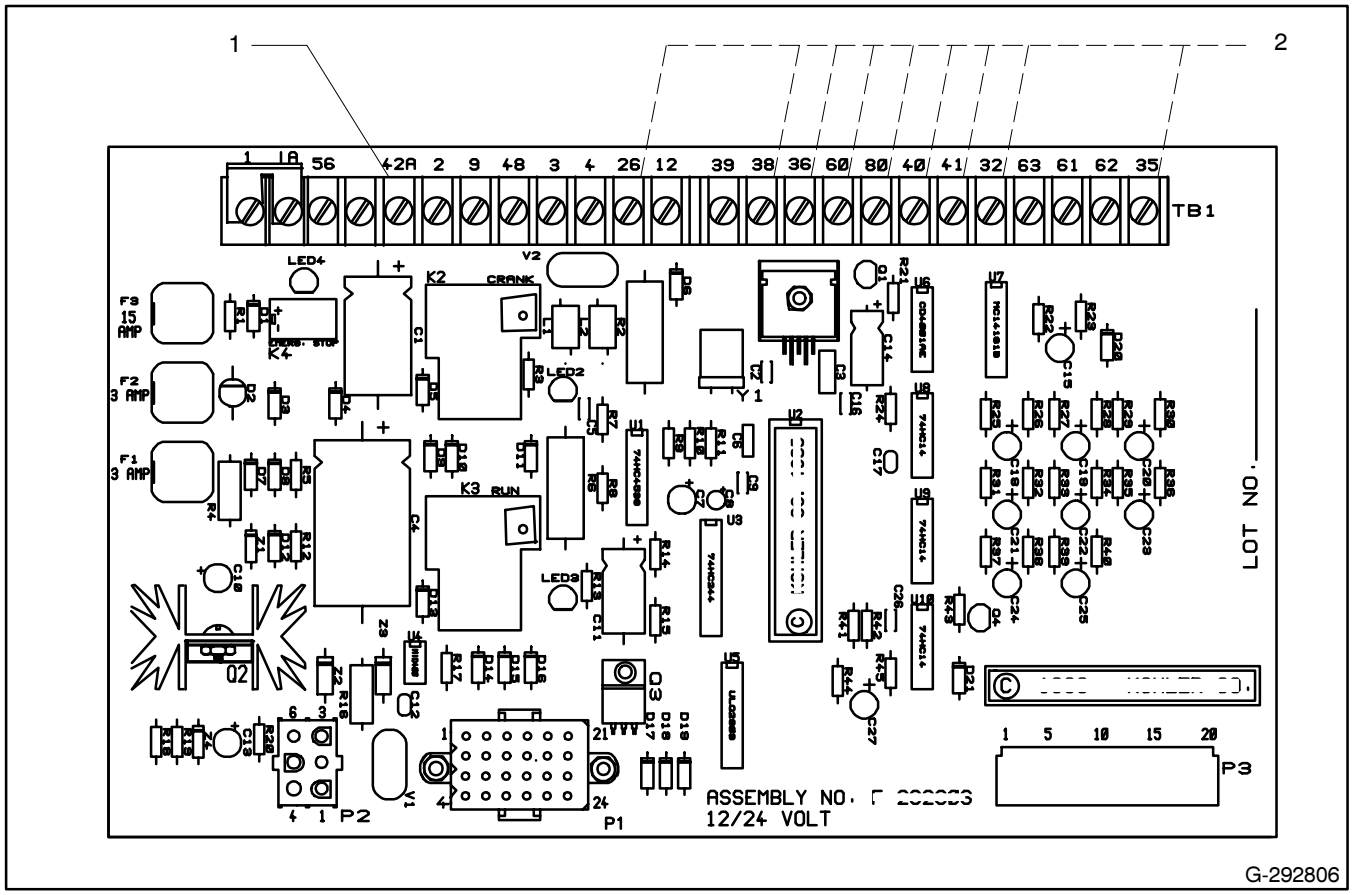

1. TB1-42A

2. TB1—(See chart titled Generator Condition Indicator Terminals)

Figure 6-10. Indicator Lamp Test Connections

Generator Condition Indicator Terminals

Indicator	Switch Position/Remarks	Check For Voltage Between:
System Ready	Master switch in AUTO position; engine switch in OFF position.	TB1-42A (+) and TB1-60 (–)
High (Engine) Water Temperature (H.W.T.)	Master switch in RUN position; engine switch in RUN position; hold toggle switch to H.W.T for at least 5 seconds	TB1-42A (+) and TB1-36 (–)
Low Oil Pressure (L.O.P.)	Master switch in RUN position; engine switch in RUN position; hold toggle switch to L.O.P. for at least 5 seconds	TB1-42A (+) and TB1-38 (–)
Auxiliary Fault (16-light controller) or Low Water Temperature/Auxiliary (6-light controller)	Master switch in RUN position; engine switch in RUN position; wait 10 seconds. Flashing AUX lamp indicates proper operation of all Auxiliary functions	TB1-42A (+) and TB1-26 (–)
Emergency Stop (local/remote) (if equipped)	Master switch in RUN position; engine switch in RUN position; remove switch lead connected to controller terminals TB1-1 or 1A.	Not Applicable

Generator Condition Indicator Terminals (Continued)

Indicator	Switch Position/Remarks	Check For Voltage Between:
Generator Switch Not in Auto	Master switch in RUN or OFF/RESET; engine switch in any position	TB1-42A (+) and TB1-80 (–)
Anticipatory (High Engine) Water Temperature (A.W.T.)	Master switch in RUN position; engine switch in RUN; hold toggle switch to A.W.T.	TB1-42A (+) and TB1-40 (–)
Anticipatory (Low Engine) Oil Pressure (A.O.P.)	Master switch in RUN position; engine switch in RUN; hold toggle switch to A.O.P.	TB1-42A (+) and TB1-41 (–)
Low Water Temperature (L.W.T.)	Master switch in RUN position; engine switch in RUN; hold toggle switch to L.W.T.	TB1-42A (+) and TB1-35 (–)
Low Fuel	Generator master switch in OFF/RESET; engine switch in RUN position Ground controller terminal TB1-63 to test. If Low Fuel lamp lights, circuit is functioning correctly	Not Applicable
Battery Charger Fault (if battery charger equipped and connected)	Generator master switch in OFF/RESET; engine switch in RUN position Ground controller terminal TB1-61 to test. If Battery Charger lamp lights, circuit is functioning correctly	Not Applicable
Low Battery Volts (if battery charger equipped and connected)	Generator master switch in OFF/RESET; engine switch in RUN position Ground controller terminal TB1-62 to test. If Low Battery Volts lamp lights, circuit is functioning correctly	Not Applicable
Overspeed	See Controller Speed Sensor Circuitry earlier in this section	Not Applicable
Overcrank	See Overcrank earlier in this section	Not Applicable
Auxiliary Prealarm (Common Fault)	Master switch in RUN position; engine switch in RUN position; hold toggle switch to L.W.T., H.W.T., or L.O.P.	TB1-42 (+) and TB1-32 (–)

Manual Controller

Use the following charts as a reference in troubleshooting individual problems. Before beginning any troubleshooting procedure, read all safety precautions at the beginning of this manual and those included in the text. Do not neglect these precautions.

⚠ WARNING

Hazardous voltage.

Moving rotor.

Can cause severe injury or death.

Do not operate generator set without all guards and electrical enclosures in place.

Hazardous voltage can cause severe injury or death. Whenever electricity is present, there is the hazard of electrocution. Open main circuit breaker on all power sources before servicing equipment. Electrically ground the generator set and electrical circuits when in use. Never come into contact with electrical leads or appliances when standing in water or on wet ground, as the chance of electrocution is increased under such conditions.

Accidental starting can cause severe injury or death. Turn generator set master switch to OFF position, disconnect power to battery charger, and remove battery cables (remove negative lead first and reconnect it last) to disable generator set before working on any equipment connected to generator set. The generator set can be started by automatic transfer switch or remote start/stop switch unless these precautions are followed.

Troubleshooting Manual Controller

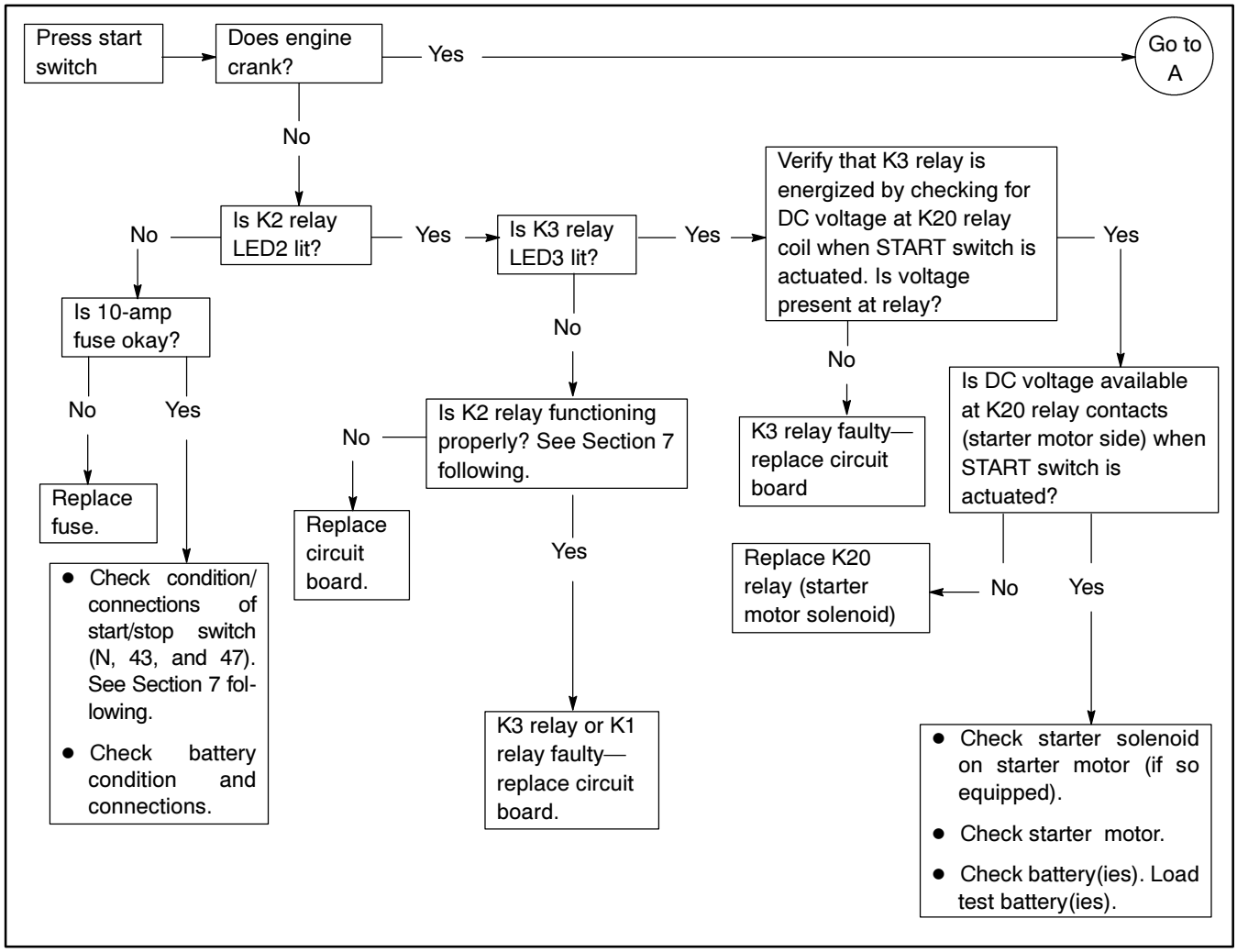

Troubleshooting Manual Controller (Continued)

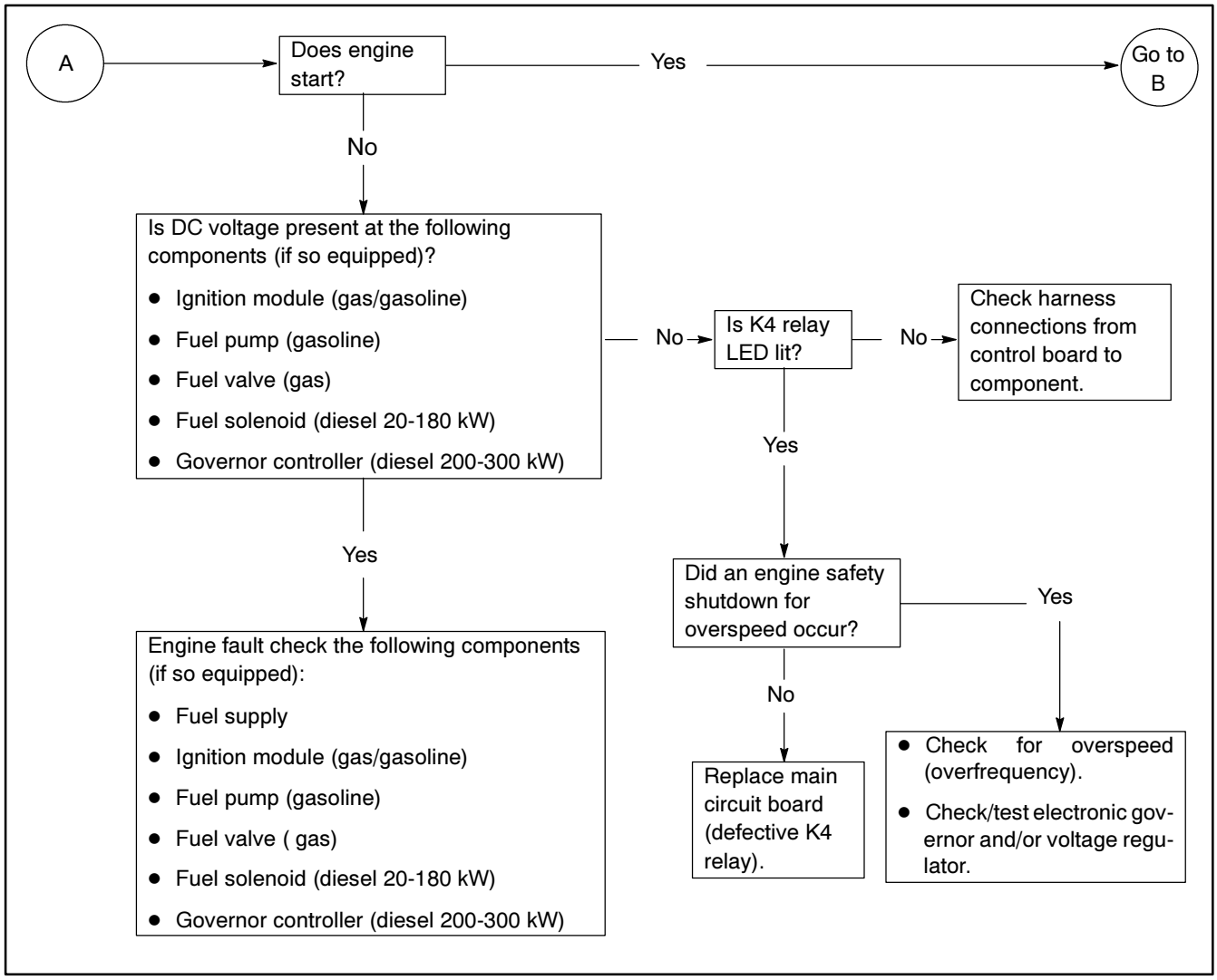

Troubleshooting Manual Controller (Continued)

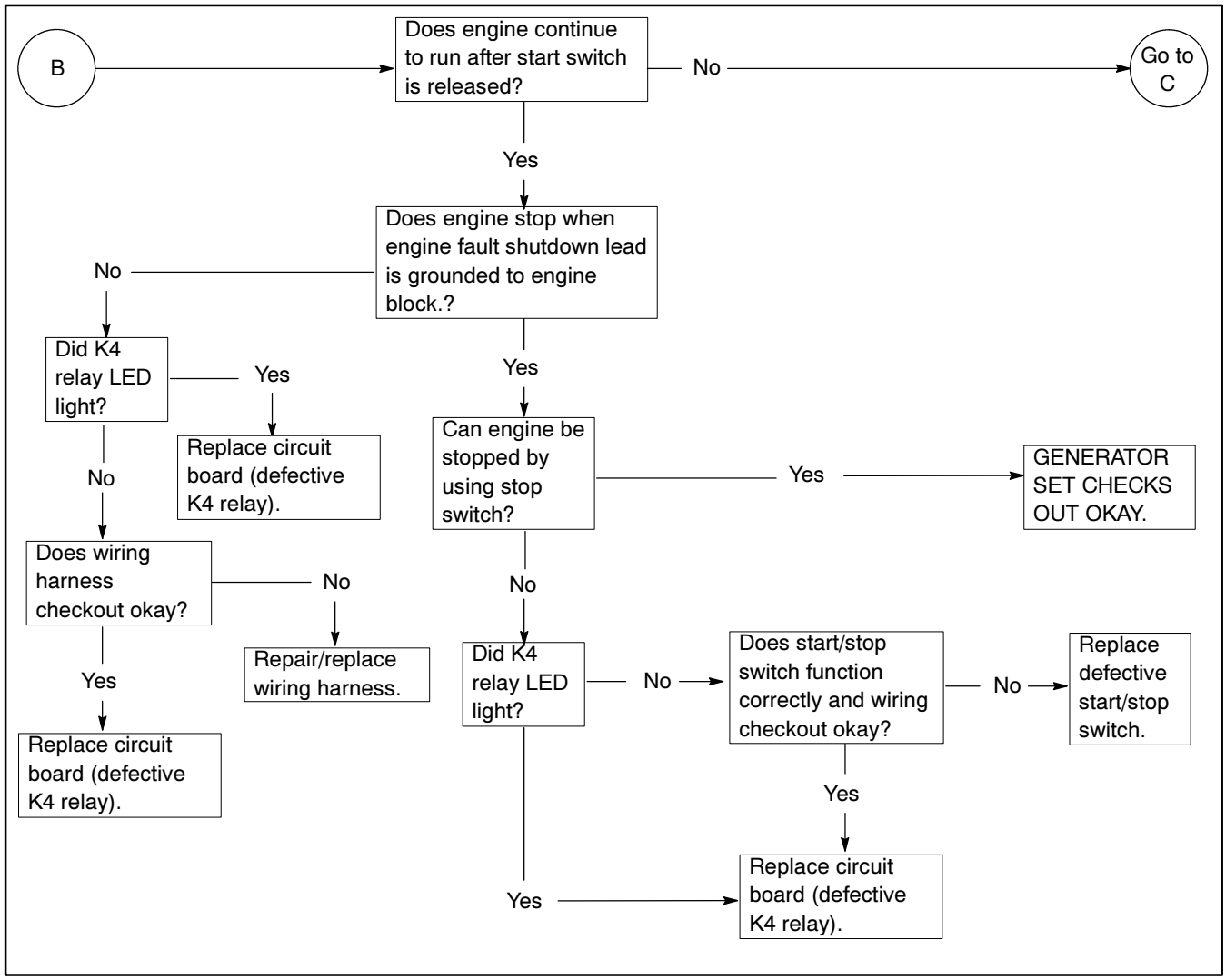

Troubleshooting Manual Controller (Continued)

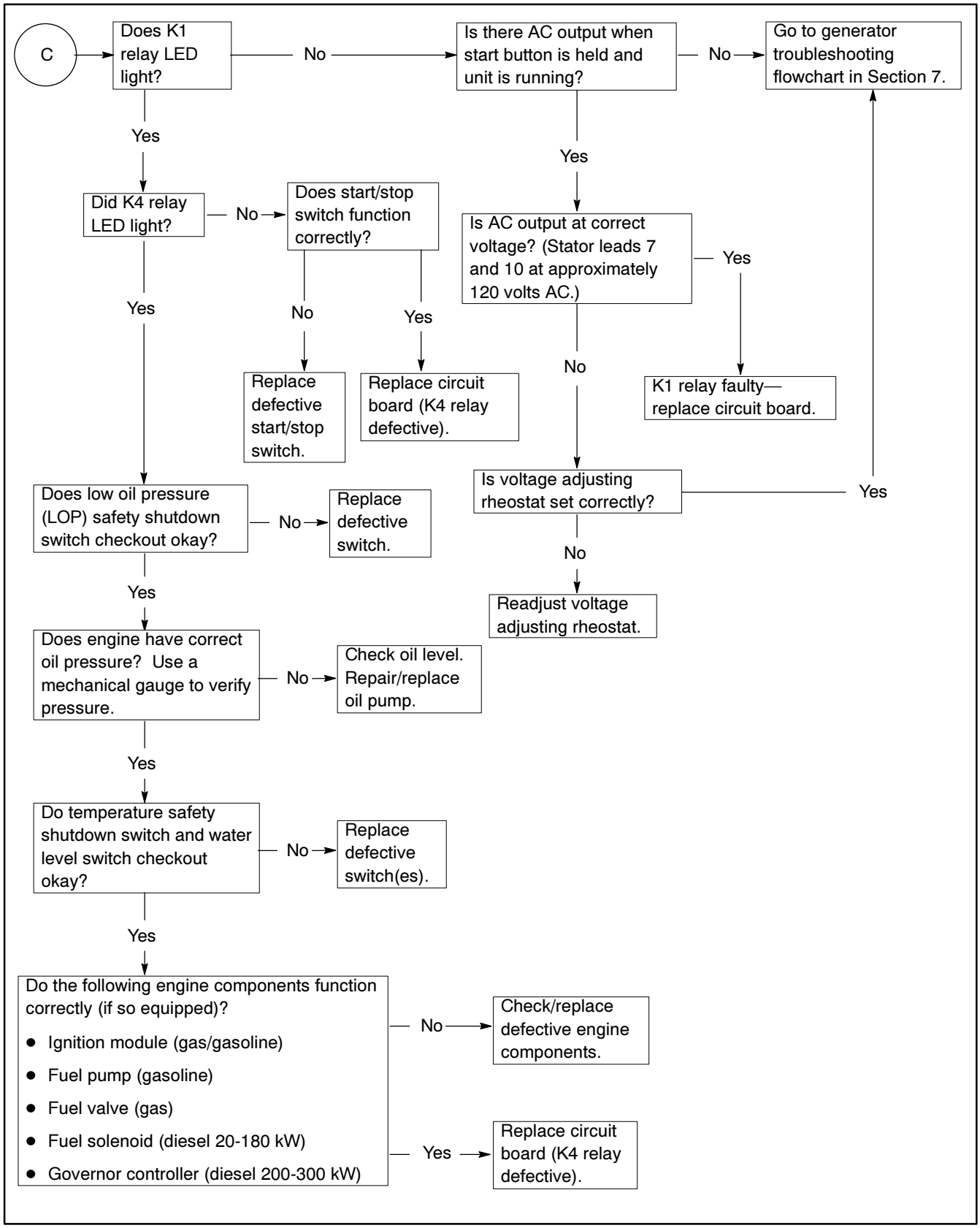

Section 7. Component Testing and Adjustment

Generator Troubleshooting

Use the following flowchart to troubleshoot the generator set when no voltage or high voltage is detected. The remaining parts of this section give additional and more detailed information about the individual checks/tests mentioned in the flowchart. Use the flowchart to initially isolate the possible problem. See the flowcharts following.

⚠ WARNING

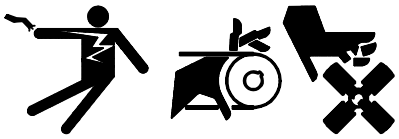

Accidental starting.
Can cause severe injury or death.

Disconnect battery cables before working on generator set (negative lead first and reconnect it last).

Accidental starting can cause severe injury or death. Turn generator set master switch to OFF position, disconnect power to battery charger, and remove battery cables (remove negative lead first and reconnect it last) to disable generator set before working on any equipment connected to generator set. The generator set can be started by automatic transfer switch or remote start/stop switch unless these precautions are followed.

⚠ WARNING

Hazardous voltage.

Moving rotor.

Can cause severe injury or death.

Do not operate generator set without all guards and electrical enclosures in place.

Hazardous voltage can cause severe injury or death. Disconnect generator set from load by opening line circuit breaker or by disconnecting generator set output leads from transfer switch and heavily taping ends of leads. If high voltage is transferred to load during test, personal injury and equipment damage may result. Do not use the safeguard circuit breaker in place of the line circuit breaker.

Troubleshooting Generator—No Output Voltage

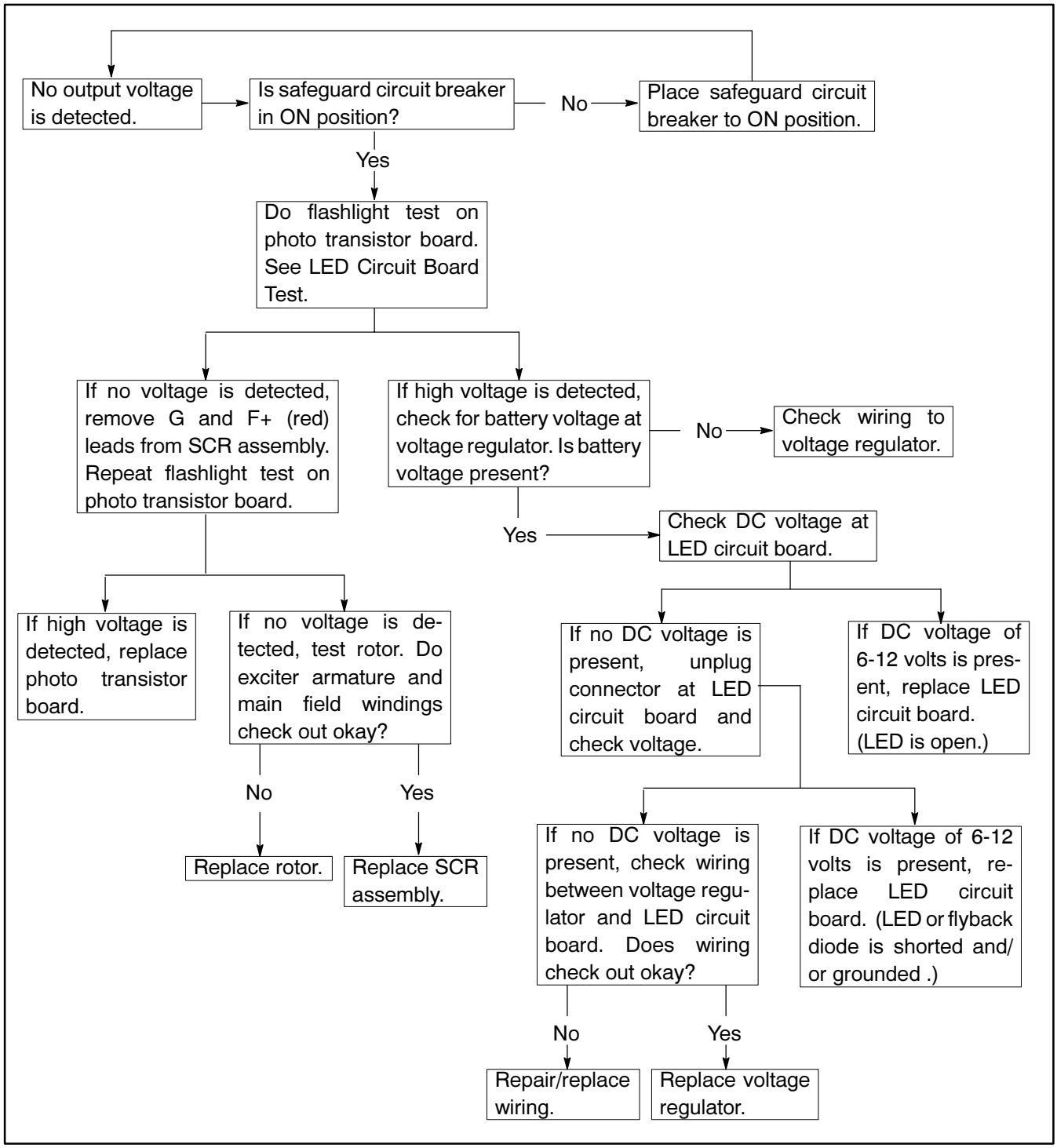

Troubleshooting Generator—High Output Voltage

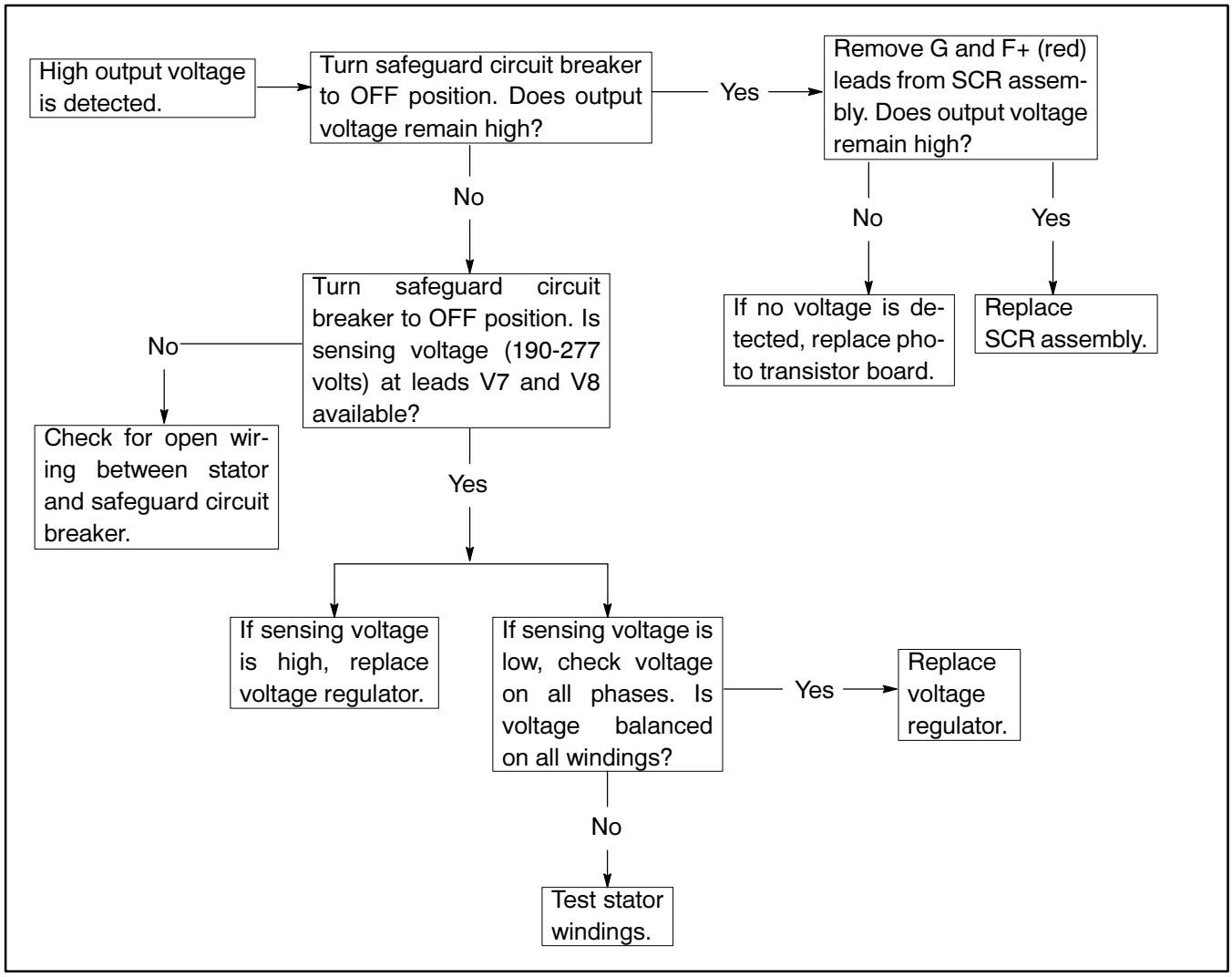

Generator Testing

This section covers generator testing for the following generator conditions:

- No output on any phase
- Overvoltage
- Fluctuating voltage

Accidental starting can cause severe injury or death. Turn generator set master switch to OFF position, disconnect power to battery charger, and remove battery cables (remove negative lead first and reconnect it last) to disable generator set before working on any equipment connected to generator set. The generator set can be started by automatic transfer switch or remote start/stop switch unless these precautions are followed.

WARNING

Hazardous voltage.

Moving rotor.

Can cause severe injury or death.

Do not operate generator set without all guards and electrical enclosures in place.

Hazardous voltage can cause severe injury or death. Disconnect generator set from load by opening line circuit breaker or by disconnecting generator set output leads from transfer switch and heavily taping ends of leads. If high voltage is transferred to load during test, personal injury and equipment damage may result. Do not use the safeguard circuit breaker in place of the line circuit breaker.

Follow all safety precautions in front of this manual and the additional precautions within the text. Figure 7-1 lists the various generator output conditions and component tests. Refer to Figure 7-2, AC Voltage Control for assistance in troubleshooting.

No Output On Any Phase

1. Check the safeguard breaker (if equipped). If safeguard breaker is open, close breaker and, with set running, check AC voltmeter for proper output voltage.
2. If proper output does not show, then:
   a. Check wire 1B from safeguard breaker and wire 7N (ground) to voltage regulator.
   b. Check for voltage to safeguard breaker (if equipped).
3. If all items in step 2 are okay, proceed to the LED circuit board flashlight test and Automatic Voltage Regulator (AVR) test as described later in this section.
4. If tests indicate LED and AVR are functioning correctly, visually inspect photo transistor board for damage (open foil pattern or heat discoloration).
5. If the photo transistor board test appears good, proceed to the exciter armature test as described later in this section.
6. If the exciter armature test indicates the armature is functioning correctly, proceed to the generator field test as described later in this section.
7. If the generator field test indicates the field is functioning correctly, replace the SCR assembly or the photo transistor board as described later in this section.

Components and Circuits to Test Under Certain Generator Output Conditions									
Generator Output Condition	LED Board	Photo Transistor Board	Automatic Voltage Regulator (AVR)	SCR Assembly	Safeguard Breaker	Exciter Armature	Generator Field	Generator Stator	Voltage Adjustment Pot
No Output	•	•	•	•	•	•	•	•	•*
Over Voltage		•**	•	•					
Fluctuating Voltage	•	•	•	•		•	•	•	

* No output voltage if voltage adjustment pot circuit is open or shorted to ground.

** Overvoltage will occur if an outside light source is present when the LED board is removed.

Figure 7-1. Troubleshooting Guide

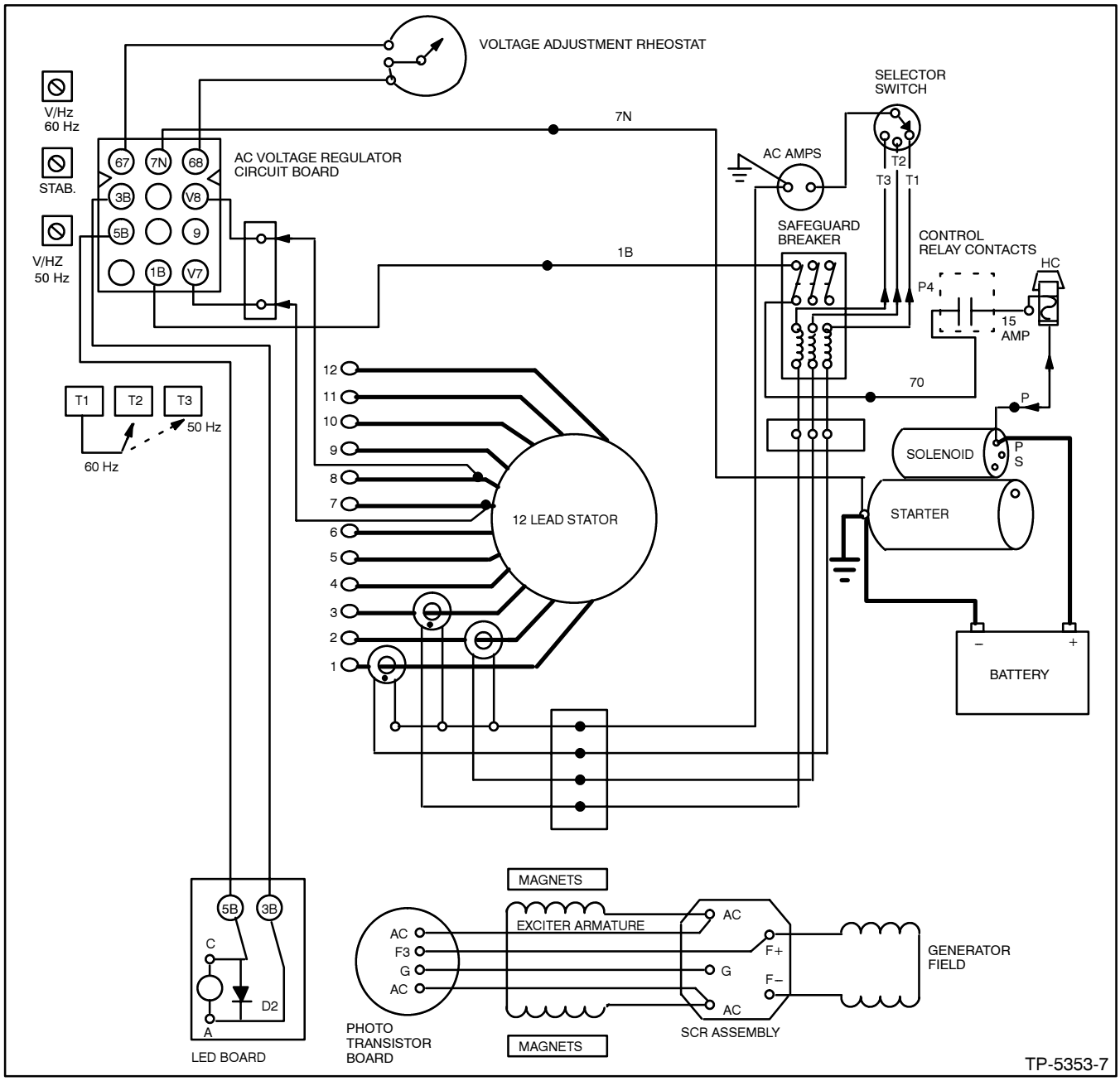

Figure 7-2. AC Voltage Control (Typical)

Overvoltage

NOTE

If overvoltage occurs, disconnect harness plug at AVR (voltage regulator). If overvoltage continues, the problem lies in the photo transistor circuit and/or SCR assembly; proceed through the following checks. If output voltage disappears, the problem is in the AVR (voltage regulator), including connections and/or wiring.

1. Examine photo transistor board for visible signs of damage (open foil pattern or heat discoloration). Replace photo transistor board if visibly damaged. If overvoltage continues after replacement of photo transistor board, proceed to Step 2.
2. Remove green (center) lead from G terminal and red lead from F+ terminal of SCR assembly. (Tape each terminal end of leads to prevent contact with adjacent metal components.)
3. With safeguard breaker open, start generator set. The lack of AC output indicates the SCR assembly is functioning properly. If overvoltage continues, replace the SCR assembly.

   NOTE

   When replacing SCR assembly, do not exceed torque value of 8 in. lbs. (0.9 Nm) when tightening SCR mounting bolts.
4. If overvoltage is read with the safeguard breaker closed, check for an open circuit in leads V7 and V8 to the AVR (voltage regulator). If these circuits are open or shorted, repair or replace. Check the voltage rheostat circuit (leads 67 and 68). Repair or replace as necessary.
5. If all the circuits described in step 4 are okay, check the voltage regulator (AVR) as described later in this section.

Fluctuating Voltage

1. Check the generator output leads for proper connections. Refer to Wiring Diagrams.
2. Check for loose connections to the AVR (voltage regulator), LED board, photo transistor board, or SCR assembly.
3. Check the stator for shorted or open windings; refer to stator testing later in this section.
4. Verify AVR adjustment. See AVR (Voltage Regulator) Operation and Adjustment later in this section.

LED Circuit Board Test

The following procedure provides information on testing the LED circuit board. Certain steps require that the generator set be running. When the generator set is not running disable the generator set. See the safety precautions listed below. Disconnect all load from the generator set during this test.

⚠ WARNING

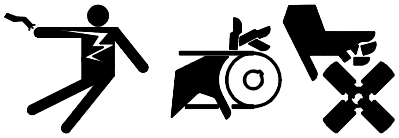

Accidental starting.
Can cause severe injury or death.

Disconnect battery cables before working on generator set (negative lead first and reconnect it last).

Accidental starting can cause severe injury or death. Turn generator set master switch to OFF position, disconnect power to battery charger, and remove battery cables (remove negative lead first and reconnect it last) to disable generator set before working on any equipment connected to generator set. The generator set can be started by automatic transfer switch or remote start/stop switch unless these precautions are followed.

⚠ WARNING

Hazardous voltage.

Moving rotor.

Can cause severe injury or death.

Do not operate generator set without all guards and electrical enclosures in place.

Hazardous voltage can cause severe injury or death. Disconnect generator set from load by opening line circuit breaker or by disconnecting generator set output leads from transfer switch and heavily taping ends of leads. If high voltage is transferred to load during test, personal injury and equipment damage may result. Do not use the safeguard circuit breaker in place of the line circuit breaker.

Hazardous voltage can cause severe injury or death. Do not expose the photo transistor board to any external light source, as exposure to light causes high voltage. Keep foreign sources of light away from photo transistor board during testing. Place black electrical tape over LED of circuit board (mounted on generator set end bracket) before starting generator set with end cover removed.

1. Remove junction box panels from generator end of unit and remove photo transistor board/LED board cover. See Figure 7-3.

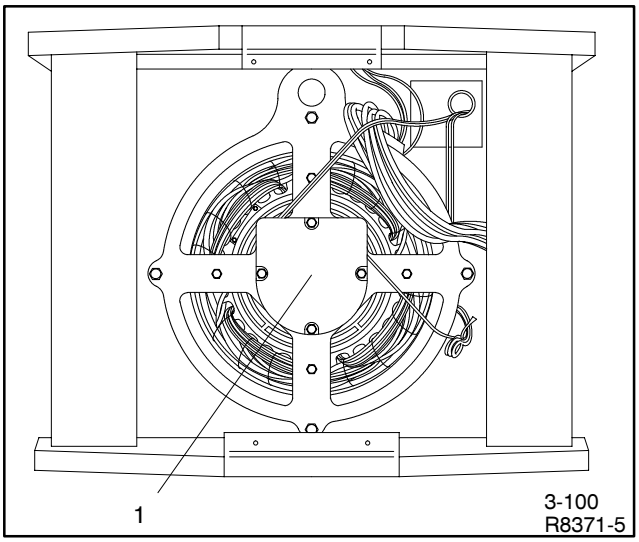

1. Photo Transistor/LED Board Cover

Figure 7-3. Panels Removed

2. With the generator set running at no load, shine a flashlight on the exposed photo transistor board. See Figure 7-4.

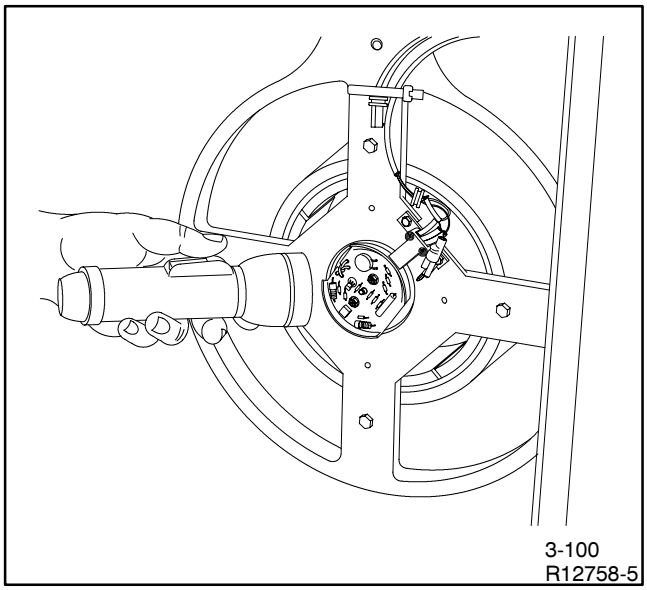

Figure 7-4. LED Flashlight Test

3. Observe the AC output voltmeter. High AC output voltage indicates the SCR assembly and photo transistor board are functioning properly. The fault is likely in the wiring, AVR, or LED circuit board as output voltage should drop to low level when flashlight is removed. If no output is observed, check the SCR assembly and photo transistor board.
4. With the generator set running, approximately 1-2 volts DC should be observed at 3B (+) and 5B (–) at the LED board. See Figure 7-5. Shine flashlight on photo transistor. DC voltage reading should drop, showing the AVR is functioning properly. If voltages are not observed, refer to the AVR test. Stop generator set.

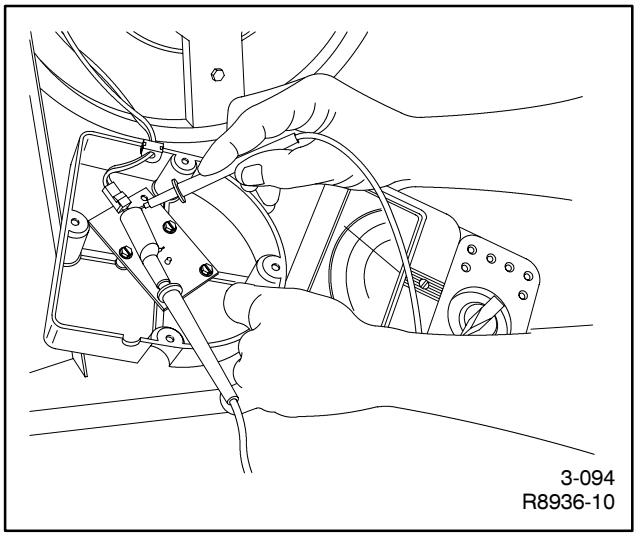

Figure 7-5. Checking LED Board

SCR Assembly and Photo Transistor Board

The SCR assembly is located behind the exciter armature and controls current flow to the generator field. The command and sensing circuitry is located on the shaft-mounted photo transistor board. See Figure 7-6. The generator set will only function if both components are functional. The following test will determine which component is faulty. Since it is necessary to remove the end bracket from the set to correctly test these components, do not begin this procedure unless there is reasonable certainty that these components are defective. See Generator Troubleshooting earlier in this section. Examine the photo transistor board for visible signs of damage (open foil patterns and heat discoloration) before removing entire SCR assembly for testing. Refer to End Bracket Removal and Replacement later in this section and Section 8—Disassembly/Reassembly for end bracket removal.

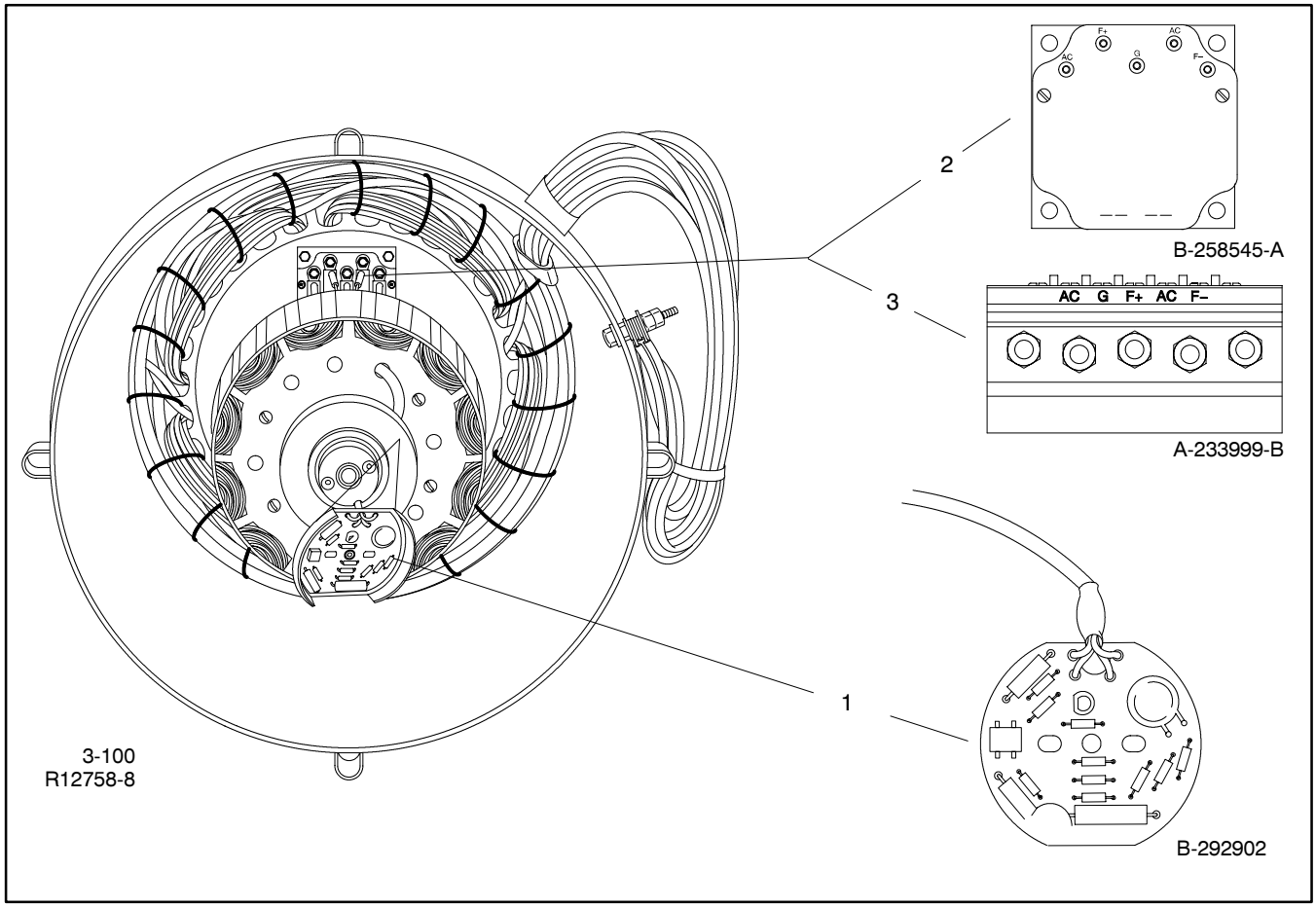

1. Photo Transistor Board
2. SCR Assembly (20-150 kW)
3. SCR Assembly (180-300 kW)

Figure 7-6. Component Locations

To test the SCR assembly and photo transistor board, the following components are needed:

- One 120-volt/110-watt light bulb with socket
- Switch—DPST (double-pole/single-throw, 120 volt 10 amp minimum)
- Fuse, 1 amp (in holder)
- 120 volt AC plug with cord
- One “good” SCR assembly and photo transistor board

This test simulates the normal operation of the components when the generator is running. In the test, a “known good” component (example: photo transistor board) is matched with a component of unknown quality (example: SCR assembly). If the components do not function normally during the test, it is reasonable to assume that the component of unknown quality is defective. Test either component in this manner.

Hazardous voltage can cause severe injury or death. Carefully follow instructions in the equipment manual when testing or servicing generator set in the presence of voltage.

Hazardous voltage can cause severe injury or death. Whenever electricity is present, there is the hazard of electrocution. Open main circuit breaker on all power sources before servicing equipment. Electrically ground the generator set and electrical circuits when in use. Never come into contact with electrical leads or appliances when standing in water or on wet ground, as the chance of electrocution is increased under such conditions.

1. Connect components as illustrated in Figure 7-7. If testing the photo transistor board, the SCR assembly must be "good." If testing the SCR assembly, the photo transistor board must be "good."

   NOTE

   When testing the SCR assembly used on 20-150 kW models, connections must make good contact with the SCR foil pattern. Secure all SCR connections with terminal nuts to ensure good contact with foil pattern during testing. The SCR threaded terminals are insulated from the SCR foil pattern and are not in contact except when "bridged" by terminal nut, electrical lead, terminal, etc. Do not exceed 8 in. lbs. (0.9 Nm) when tightening SCR terminal nuts.

2. With cord switch in the OFF position, plug in electrical cord.
3. Turn cord switch to the ON position.
4. Apply light source directly to photo transistor board. Shield the photo transistor board from all sources of light during this test. If both components are "good," the test fixture light bulb will light when the external light source is applied to the photo transistor board. Remove the light source; the fixture light bulb should go out. If the test fixture light bulb does not light or is lit prior to receiving external light source, the component being tested is defective (in this example the SCR). Replace the SCR assembly.

   NOTE

   When replacing SCR assembly, do not exceed a torque value of 8 in. lbs. (0.9 Nm) when tightening SCR mounting bolts.

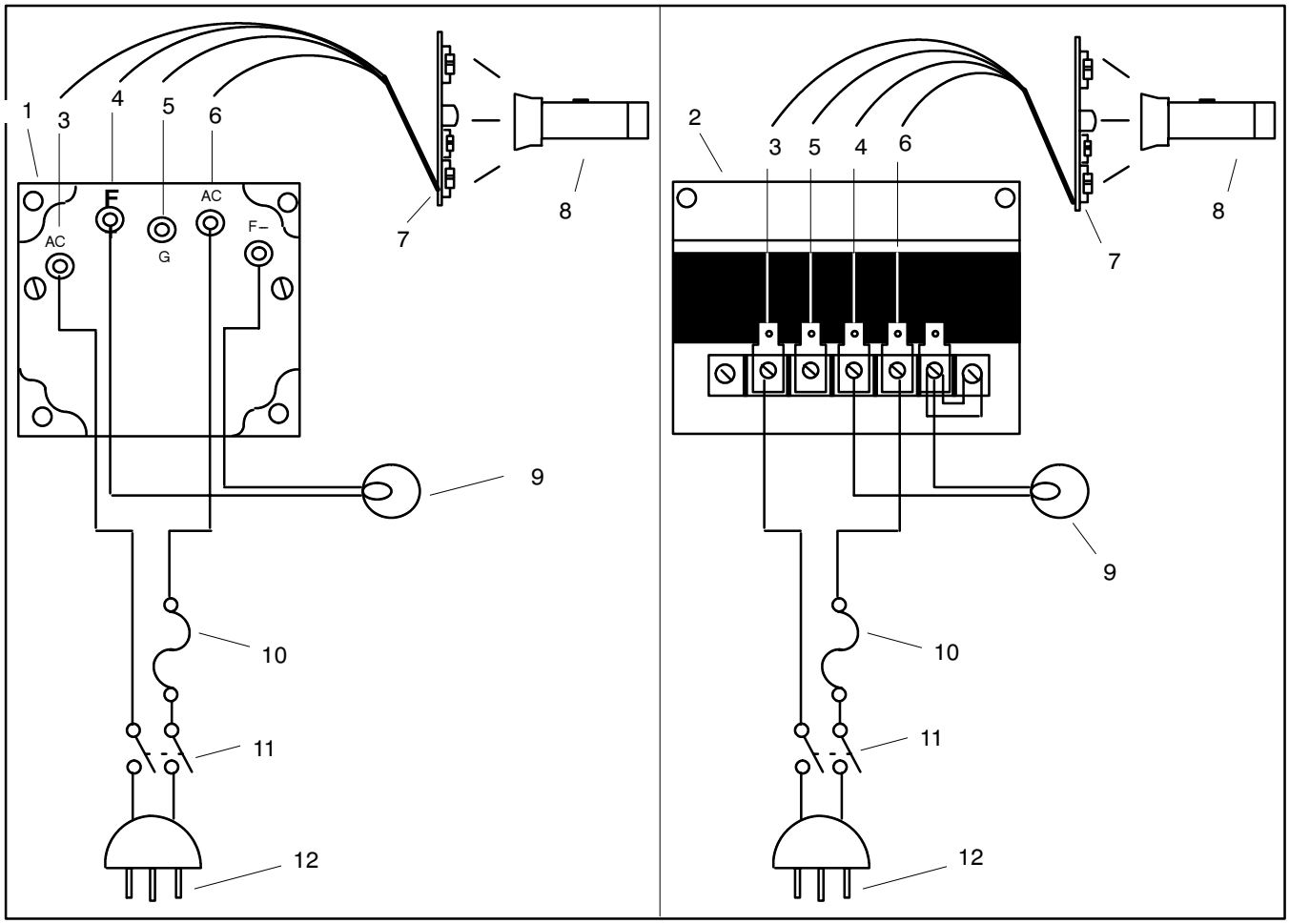

1. SCR Assembly (20-150 kW)
2. SCR Assembly (180-300 kW)
3. White Wire
4. Red Wire
5. Green Wire
6. Black Wire
7. Photo Transistor Board
8. Light Source (Flashlight)
9. 120 Volt/100 Watt Lamp
10. Fuse (1 Amp)
11. Switch (DPST) S1
12. 120 Volts AC

Figure 7-7. SCR Assembly and Photo Transistor Board

Automatic Voltage Regulator (AVR) Operation and Adjustment

The AVR monitors output voltage magnitude and frequency to supply current to the stationary LED board. The AVR circuit board includes volts/Hz and stability adjustment pots. The volts/Hz adjustment is factory set and normally requires no further adjustment. If replacement of the controller circuit board or operation of the generator under extreme loads results in voltage instability, adjust the pots according to the procedure following. See Figure 7-8.

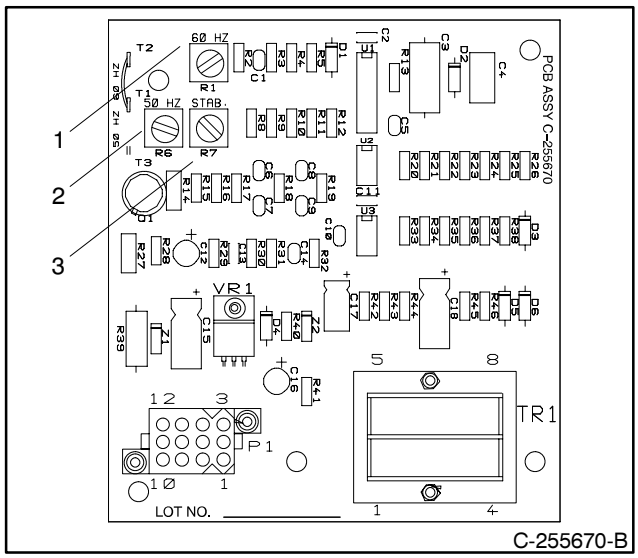

1. 60 Hz Voltage Adjustment
2. 50 Hz Voltage Adjustment
3. Stability Adjustment

Figure 7-8. AVR Adjustment

Stability Pot. Fine tunes voltage regulator to reduce light flicker.

Volt/Hz. Pot. This adjustment determines engine speed (Hz) at which generator output voltage will begin to drop.

1. Turn generator master switch to OFF/RESET.
2. Set stability pot to far counterclockwise position.
3. Connect a 100-watt light bulb across terminals V0 and V7 on controller terminal strip or across terminals on controller frequency meter.
4. Start generator set. With generator running at no load, observe light bulb flicker. Excessive light bulb flicker indicates poor stability.
5. Adjust stability pot until minimum flicker is obtained.
6. Use controller voltage adjustment pot (or remote voltage adjustment pot) to make adjustments to generator while running under normal load (if required).
7. Adjust engine speed to desired cut-in frequency (factory setting is 57.5-58.0 Hz for 60 Hz models or 47.5-48.0 Hz for 50 Hz models) as measured on frequency meter. See Section 7—Governor for more information on engine adjustment.
8. Rotate Volts/Hz adjustment pot clockwise until voltage level begins to drop (as measured on voltmeter). When set to these specifications, the generator will attempt to maintain normal output until engine speed drops below the frequency set in the previous step (as load is applied).
9. Adjust engine speed to obtain a full load engine speed of 1800 rpm (60 Hz) or 1500 rpm (50 Hz).
10. Use controller voltage adjustment pot (or remote voltage adjustment pot) to make final adjustments to generator while running under normal load.
11. Readjust stability pot (if necessary).

To determine whether the AVR is functioning properly, reduce engine speed (Hz) and watch for a corresponding drop in AC voltage. At 60 Hz operation, the voltage will remain constant until engine speed drops below 58 Hz (approximately). If AC frequency drops below 58 Hz, AC voltage will decline. At 50 Hz operation, AC voltage remains constant until engine speed is reduced to 48 Hz (approximately). If the AVR is not functioning properly, refer to the following test to determine cause of malfunction.

To Test AVR

With the safeguard breaker closed (if equipped):

1. Disconnect the wiring harness connector from the voltage regulator and check for continuity between the voltage sensing leads V7 and V8 (pins 4 and 10). See Figure 7-9. If this circuit is open , repair or replace. An open circuit will normally result in a high voltage or overvoltage condition. Check the 15-amp fuse (if equipped).
2. If there is continuity between V7 and V8, check for continuity in the voltage adjustment circuit (leads 67 and 68). With the harness disconnected check the resistance between pins 1 and 3. This resistance should change as the voltage adjust rheostat is turned. Repair or replace defective components as necessary. A defective voltage adjust rheostat usually results in a nonadjustable voltage.
3. Check for battery voltage at the voltage regulator harness plug (pins 2 and 11) with the generator set running. If there is not a voltage reading, check the safeguard circuit breaker. If battery voltage is not present, there should be a very low voltage at the main output leads.
4. While the generator set is running, check for approximately 1-2 volts DC output at terminals 3B (+) and 5B (–) on the LED board or separate 3B/5B connector and check for 8 volts (approximately) at the connector. If voltage is not measured at connector, check for open or short circuit in wiring back to voltage regulator. If a fault exists in voltage regulator wiring, repair or replace as necessary. If voltage regulator wiring tests good, replace the voltage regulator. Low voltage at the LED circuit board may cause a low output voltage fault.

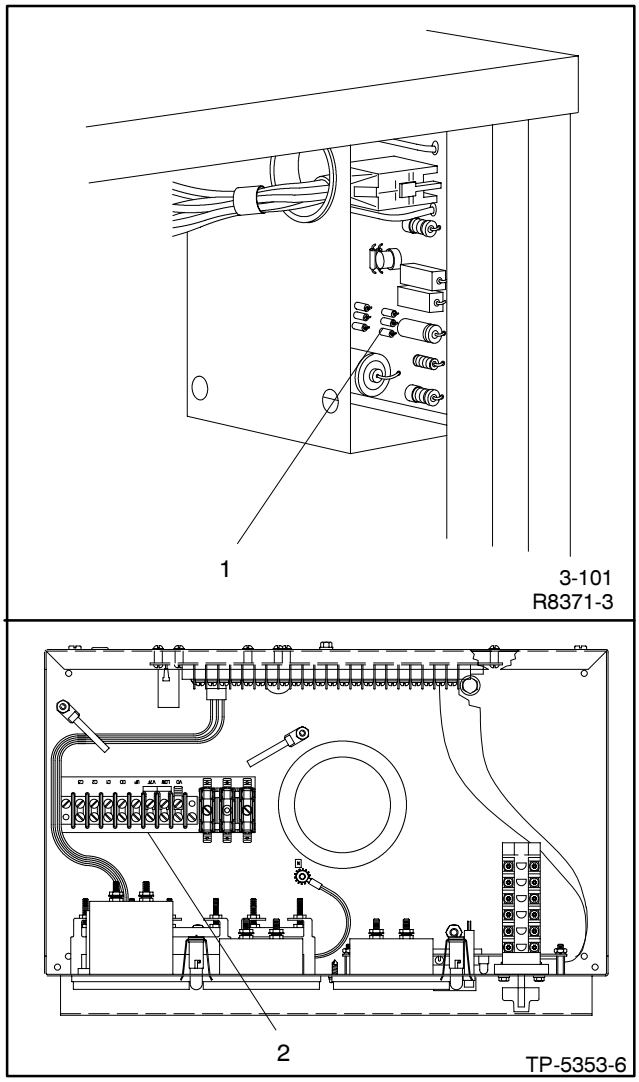

1. AVR Board in Junction Box
2. Controller Terminal Strip

Figure 7-9. AVR and Connections

Stator

NOTE

Generator sets use a skewed (slanted) rotor with a straight stator. When replacing either rotor or stator, be sure replacement is the same as the original.

1. Check the generator output leads for proper connections. Refer to Wiring Diagrams.
2. Check the stator windings for:
   - Shorted windings: Inspect for burnt or hot windings. Replace stator if these conditions exist. See Figure 7-10.

     NOTE

     Disconnect V7, V8, V9, V0 at AC from controller terminal blocks before doing this test

   - Open windings: With ohmmeter, check **each pair** of leads for low resistance readings (continuity). High resistance across A or low resistance (continuity) across B and ground indicates a faulty stator; replace stator. See Figure 7-11.

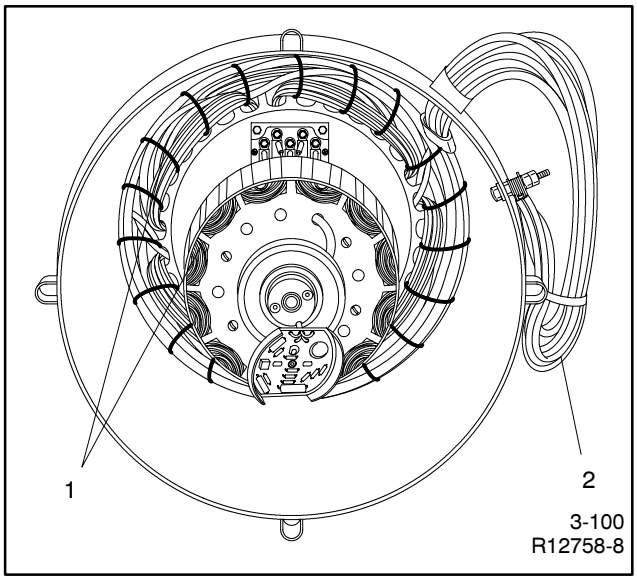

1. Windings
2. Leads

Figure 7-10. Stator

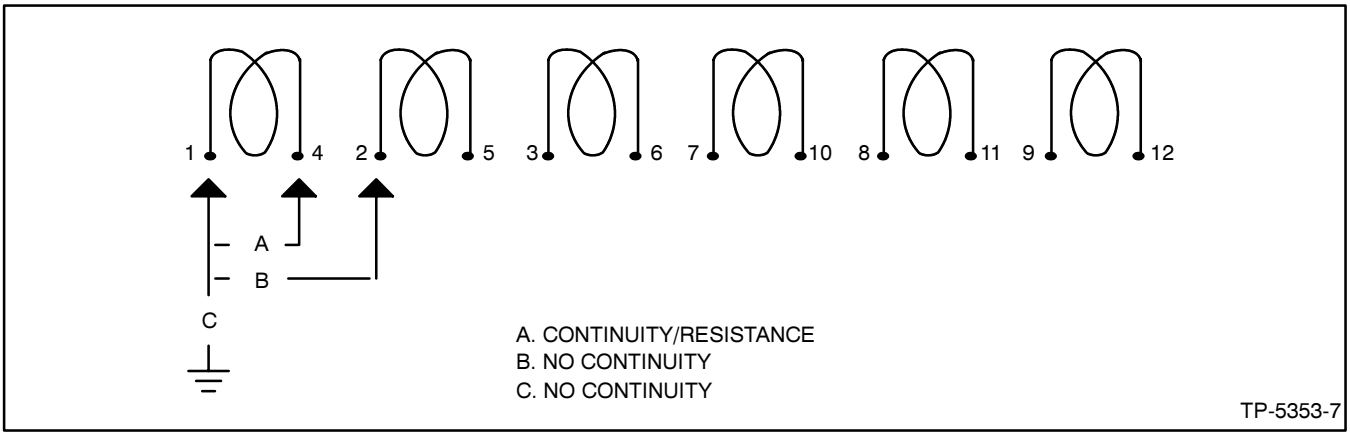

Figure 7-11. Stator Winding Test

Generator Field

1. Disconnect battery (negative lead first). Remove end bracket. See End Bracket Removal and Replacement later in this section and Section 8—Disassembly/Reassembly. Disconnect F+ and F− from SCR assembly.
2. With an ohmmeter, check for continuity across F+ and F− leads (see Figure 7-12). Resistance readings are shown in Section 1—Specifications, Generator.

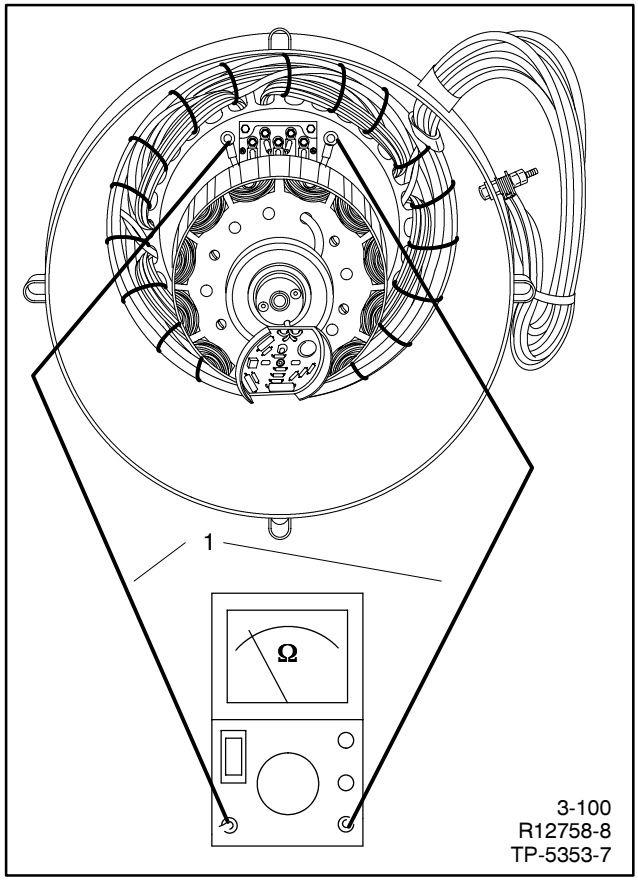

1. Ohmmeter connections across F+ and F− leads

Figure 7-12. Field Continuity Check

3. Check for a grounded generator field. No continuity should exist between field leads and rotor assembly.
4. Using a megohmmeter, apply 500 volts DC to F+ or F− lead and rotor shaft. See Figure 7-13. Follow the instructions of the megohmmeter manufacturer when performing this test. A reading of approximately 500K ohms (1/2 megohm) and higher indicates the field winding is good. A reading of less than 500K ohms (approximately) indicates deterioration of winding insulation and possible current flow to ground. Repair or replacement of the rotor assembly is necessary.

   Repair F+ and F− if test should show leads shorted to ground. Solder and insulate splices. Use new sleeving when tying leads to shaft or heat sink.

   Replace generator rotor assembly if test shows a shorted or grounded winding.

Hazardous voltage can cause severe injury or death. Carefully follow instructions in the equipment manual when testing or servicing generator set in the presence of voltage.

Hot parts can cause severe injury or death. Avoid touching generator set field or exciter armature. Generator set field and exciter armature will become hot if shorted.

Hazardous voltage can cause severe injury or death. Follow instructions of test equipment manufacturer when performing high-voltage test on rotor or stator. An improper test procedure can damage equipment or lead to future generator set failures.

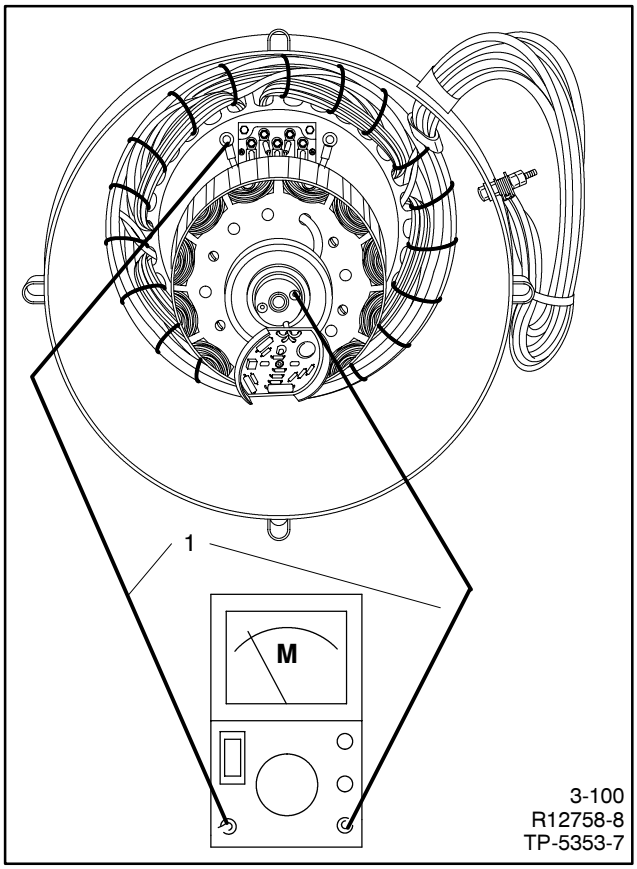

1. Megohmmeter connections across F+ and F− leads and rotor shaft

Figure 7-13. High Voltage Test

Exciter Armature

Hot parts can cause severe injury or death. Avoid touching generator set field or exciter armature. Generator set field and exciter armature will become hot if shorted.

Hazardous voltage can cause severe injury or death. Follow instructions of test equipment manufacturer when performing high-voltage test on rotor or stator. An improper test procedure can damage equipment or lead to future generator set failures.

1. Disconnect battery (negative lead first). See End Bracket Removal and Replacement and Section 8—Disassembly/Reassembly for end bracket removal. Remove end bracket. Disconnect AC leads from SCR assembly.
2. With an ohmmeter, check for continuity across AC leads. See Figure 7-14.
3. Repair AC leads if damaged or open. Solder and insulate splices. Use new sleeving when tying leads to shaft or heat sink.

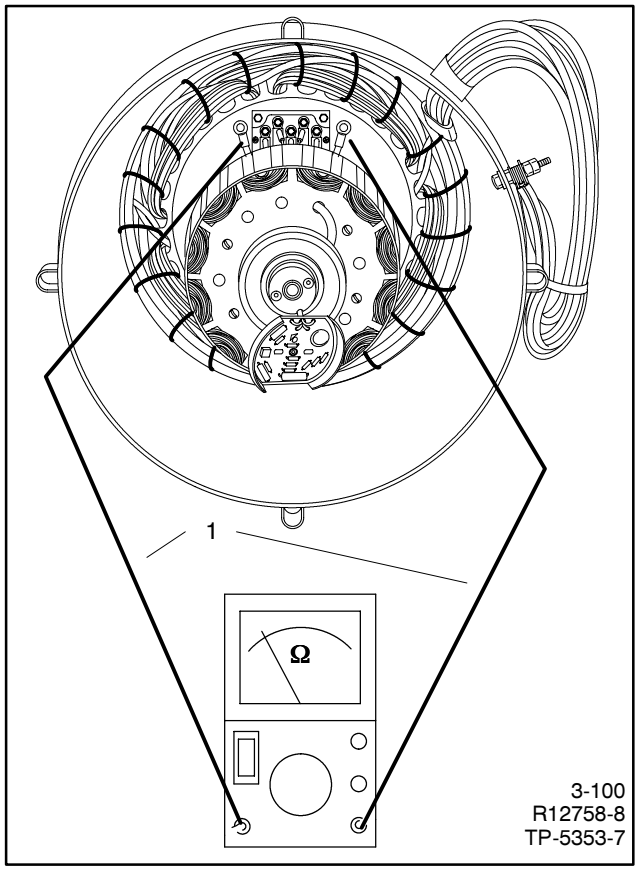

1. Ohmmeter connections across AC leads

Figure 7-14. Exciter Armature Continuity Check

4. Visually check exciter armature for shorted winding(s); with an ohmmeter check for low resistance readings. See Section 1—Specifications, Generator for resistance readings. See Figure 7-14. Low resistance readings indicate a faulty exciter armature requiring replacement of rotor assembly.
5. Using a megohmmeter, apply 500 volts DC to rotor shaft and either AC lead. See Figure 7-15. Follow the instructions of the megohmmeter manufacturer when performing this test. A reading of approximately 500K ohms (1/2 megohm) and higher indicates the field winding is good. A reading of less than 500K ohms (approximately) indicates deterioration of winding insulation and possible current flow to ground. Repair or replacement of the rotor is necessary.
6. Repair AC leads if test indicates leads shorted to ground. Solder and insulate splices. Use new sleeving when tying leads to shaft or heat sink.
7. Replace rotor assembly if test shows armature is shorted to ground.

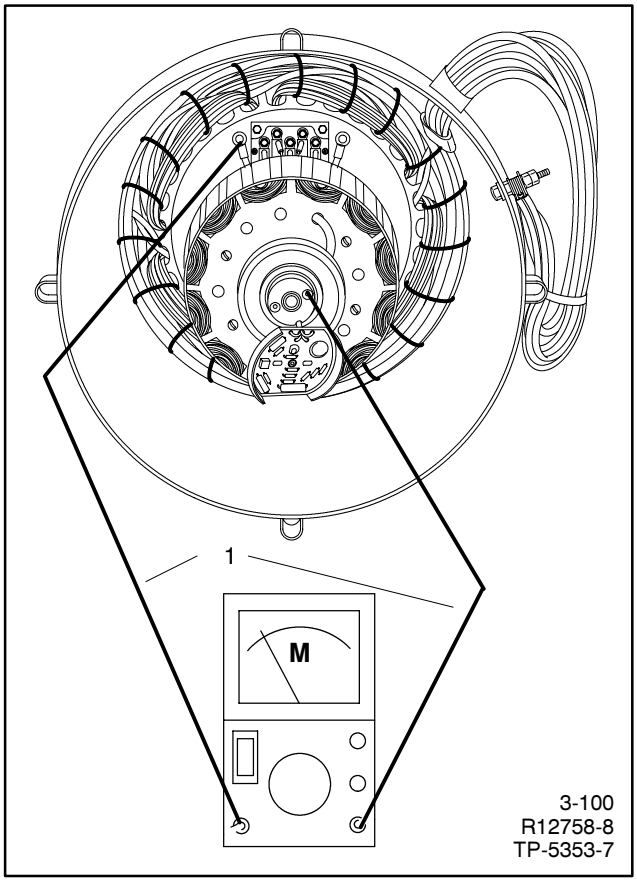

1. Megohmmeter connections across either AC lead and rotor shaft

Figure 7-15. High Voltage Test

End Bracket Removal and Replacement

This procedure is a condensed version of the one found in Section 8—Disassembly/Reassembly.

NOTE

On some models, it is necessary to loosen the generator junction box to remove the end bracket. Remove the six junction box mounting screws and pull the junction box away from the engine to remove end bracket.

1. Remove LED board and cover. Disconnect leads from speed sensor.
2. Remove screws holding actuator cup and photo transistor board.
3. Reach in and remove leads—photo transistor board leads from SCR assembly. This will allow slack when removing the end bracket.
4. Remove four bolts holding end bracket to stator.
5. Use a puller tool to remove end bracket. See Figure 7-16.

NOTE

To avoid loosening exciter field magnets, do not attempt to remove end bracket by pounding with a hammer.

6. Pull the end bracket and exciter field assembly over the exciter armature. Be extremely careful to avoid damaging exciter field magnets or photo transistor board.
7. Reverse order of disassembly to reinstall end bracket/exciter field assembly.

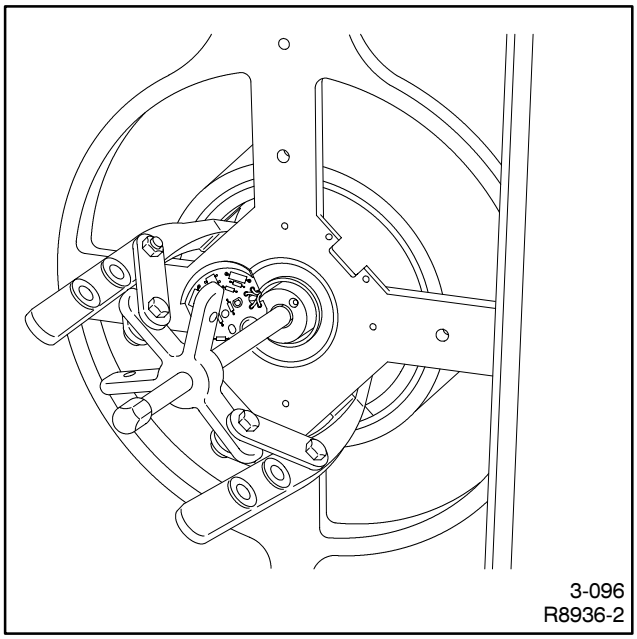

Figure 7-16. Removing End Bracket

Speed Sensor Test

Follow the procedure outlined below to determine if the speed sensor (overspeed fault) is emitting a signal.

1. With generator master switch in OFF/RESET position, connect a DC voltmeter between positive (+) lead (wire 24) at speed sensor and ground (wire 2). Voltmeter should read approximately 8-10 volts DC.
2. With generator set running, connect DC voltmeter negative probe to “0” terminal (wire 16—white) on speed sensor. Place voltmeter positive probe on positive (+) terminal (wire 24—red). Voltmeter should indicate approximately 12 volts DC.

NOTE

During the test the controller leads must remain connected to the speed sensor terminals. Slide leads from speed sensor terminals only enough to expose connection for test leads. Do not disconnect leads.

If speed sensor is emitting a signal, check continuity of speed sensor leads (wires 2, 16, and 24) between controller P1 connector and lead terminals at speed sensor.

If the speed sensor is not emitting a signal, test the speed sensor through the following procedure:

1. Connect speed sensor, voltmeter, and DC voltage source as shown in Figure 7-17.
2. Touch sensing surface with a flat piece of iron or steel—at least 1/4 cubic inch (4.1 cm) in size.
3. Voltmeter test reading should equal source voltage.
4. Remove iron or steel from sensing surface and observe no test voltmeter reading.

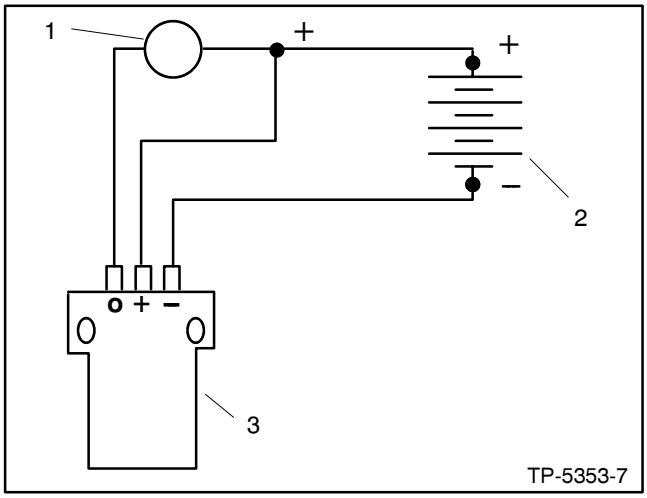

1. DC Voltmeter
2. 12-Volt Battery or DC Power Supply
3. Sensing Surface

Figure 7-17. Speed Sensor Test

Air Damper Switch Adjustment

The air damper switch is found on 200-1600 kW models using Detroit Diesel engines with microprocessor controllers and paralleling engine gauge box (switchgear) controllers. This switch uses the normally closed contacts to signal the microprocessor controller. Models with paralleling engine gauge box (switchgear) controllers have both normally open and normally closed contacts available to signal the switchgear logic.

When the emergency stop button is energized the air damper is activated. The generator set resetting procedure includes resetting the air damper lever. An LED on the microprocessor controllers indicates a tripped air damper. Resetting the air damper lever will turn off the microprocessor controller LED.

If the air damper lever is reset and the switch needs adjustment, use the following procedure and see Figure 7-18. The generator set must not be running during this adjustment.

5. Reset the air damper switch if not already done. Disconnect the air damper switch wiring harness at the 2-pin connector near the switch. Connect an ohmmeter to the harness of the switch.
6. If the switch is correctly adjusted no continuity will be measured.

   If continuity is measured, loosen the two attaching switch screws and move the switch toward the air damper lever until no continuity is measured. When the switch is correctly positioned tighten the switch screws.
7. Reconnect the switch wiring harness.
8. Reconnect the generator set battery. The air damper LED on microprocessor controllers must not be on. If the LED is on, readjust the switch as described in step 2.
9. Start the generator set and run for a few minutes. Stop the generator set using the emergency stop switch. The air damper LED on microprocessor controllers will turn on if correctly adjusted.
10. Disconnect the switch wiring harness and reconnect an ohmmeter. Continuity is measured when correctly adjusted.
11. No continuity is measured when the air damper is reset. Reconnect the switch wiring harness.

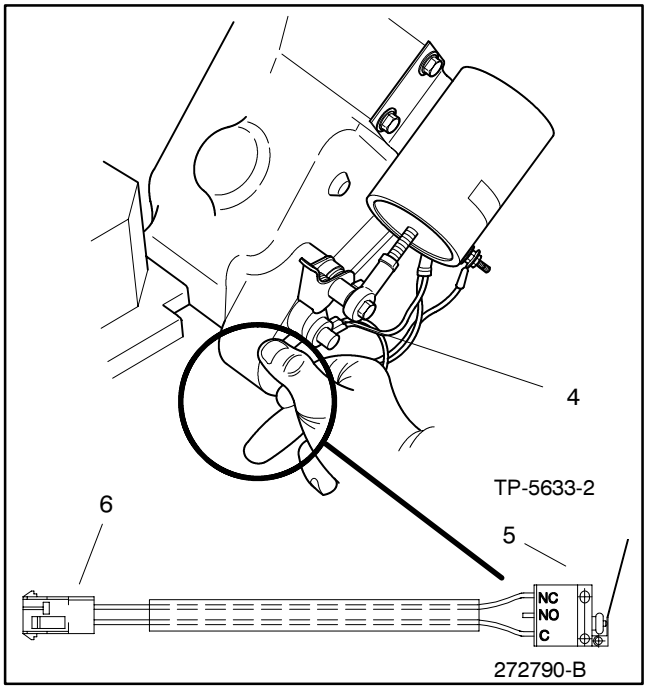

4. Air Damper Lever
5. Air Damper Switch
6. Wiring Harness Connector

Figure 7-18. Air Damper Lever (Detroit Diesel Powered)

Overspeed/Time Delay Circuit Board

The overspeed circuitry protects the generator set and equipment connected to it from overfrequency. The feature is standard on manual controllers.

Overfrequency will occur if the governor was misadjusted or defective. Shutdown will occur immediately should frequency reach 68-70 Hz or greater. This setting applies to 50 and 60 Hz. models.

The time delay circuitry provides approximately a 5 second delay before generator set is subject to fault shutdown from low oil pressure (LOW), high engine temperature (HWT), or low water level (LWL).

NOTE

Overspeed is not subject to the 5-second shutdown delay.

This 5-second delay is necessary during starting to allow engine to build-up oil pressure. This time delay is present only at cranking. After the generator set comes up to correct AC voltage, the time delay circuitry times out. After approximately 5 seconds, engine fault shutdowns are operative.

Test both relays and circuit board for function. See Figure 7-19 and use the following procedure. Tests are made with circuit board in place and connected to generator set. Do not connect load to generator set.

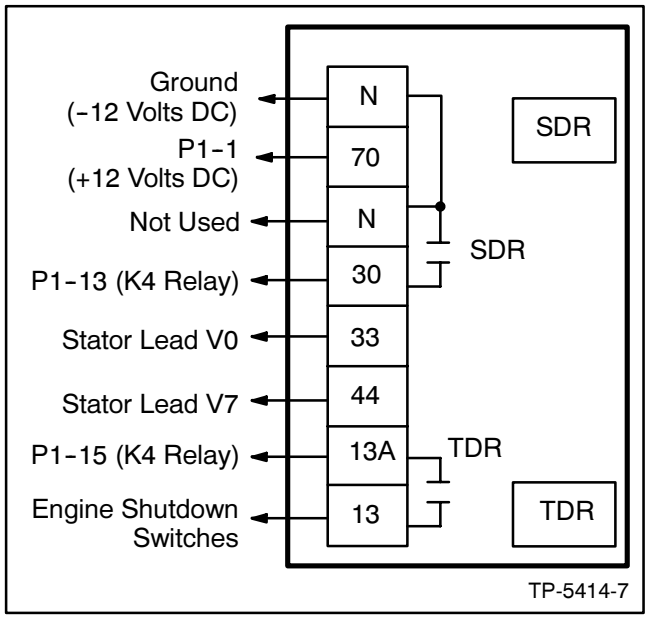

Figure 7-19. Overspeed/Time Delay Circuit Board

Overspeed Circuitry and Relay

The following conditions indicate that the overspeed circuitry and relay are functional.

1. Check for 12 volts DC across terminals 70 (+) and N (-). This is the battery supply voltage. If voltage is not present K2 relay on main circuit board is defective.
2. Check for 110-190 volts across terminals 33 and 44. These are sensing leads for frequency. If voltage is not present, test stator.
3. Connect a frequency meter to terminals 33 and 44. No continuity is measured using an ohmmeter between terminals 30 and N when frequency is below 68-70 Hz.
4. Momentarily increase frequency at engine governor to a value of 70 Hz or greater. When frequency reaches 68-70 Hz or greater, continuity is measured using an ohmmeter between terminals 30 and N.
5. If the circuit board fails steps 3 and/or 4 it is defective.

Time Delay Circuit Board

The following conditions indicate that the time delay circuitry and relay are functional.

1. Check for 110-190 volts across terminals 33 and 44 after generator set comes up to speed. These are sensing leads for frequency. If voltage is not present, test stator.
2. Initially no continuity is measured using an ohmmeter between terminals 13 and 13A.
3. After approximately 5 seconds continuity is measured using an ohmmeter between terminals 13 and 13A.
4. If the circuit board fails steps 2 and/or 3 it is defective.

Overvoltage Circuit Board

The overvoltage circuit board provides overvoltage protection when output voltage is 15% above nominal voltage for more than one second. This option is available only on microprocessor controllers.

Initial setup is necessary dependent upon specific generator application. Clip and remove resistor R2 from the overvoltage shutdown board if installing on generator set with 24-volt cranking. Determine voltage of generator set output. If voltage is 139/240 volts, 3 phase, 4 wire, 60 Hz low wye or 277/480 volt, 3 phase, 4 wire, 60 Hz high wye, leave jumper wire J1 installed. For all voltages except 139/240 volt or 277/480 volt, remove jumper wire J1 from the overvoltage shutdown board.

If the function of the circuit board is questionable, perform the following test. See Figure 7-20.

⚠ WARNING

Hazardous voltage.

Moving rotor.

Can cause severe injury or death.

Do not operate generator set without all guards and electrical enclosures in place.

Hazardous voltage can cause severe injury or death. Disconnect generator set from load by opening line circuit breaker or by disconnecting generator set output leads from transfer switch and heavily taping ends of leads. If high voltage is transferred to load during test, personal injury and equipment damage may result. Do not use the safeguard circuit breaker in place of the line circuit breaker.

1. Disconnect generator from load (if not already done). Place generator master switch to RUN position to start generator set.
2. Loosen locknut (if equipped) and turn voltage adjustment rheostat on controller slowly clockwise until generator set shuts down and auxiliary shutdown lamp lights. If generator set shuts down, go to step 3.

NOTE

If generator set does not shut down, stop generator set using generator master switch. Recheck connections of overvoltage kit. Retest shutdown function. If shutdown still does not occur, stop generator set using generator master switch. Use the following voltage check procedure to determine fault.

a. With generator set stopped, disconnect lead 30 at overvoltage shutdown board. Connect DC voltmeter (10 volt scale or higher) positive (+) test lead to terminal 30 on overvoltage shutdown board and negative (–) test lead to controller ground lug.

b. Start generator set. Turn voltage adjustment rheostat to an overvoltage condition and observe voltmeter reading. A reading of less than 5 volts indicates the overvoltage board is defective. A reading of 5 volts or higher indicates the controller board is defective.

c. Stop generator set. Disconnect DC voltmeter. Replace defective component. Reconnect lead 30 to overvoltage shutdown board. Repeat testing procedure.

3. Turn voltage adjustment rheostat on controller slightly counterclockwise. Place generator switch to OFF/RESET position.
4. Place generator master switch to RUN position to start generator set. Turn voltage adjustment rheostat as necessary for AC voltmeter to read correct voltage for phase indicated by selector switch.
5. Disconnect battery, negative lead first. Reconnect generator to load.
6. Reconnect battery, negative lead last.

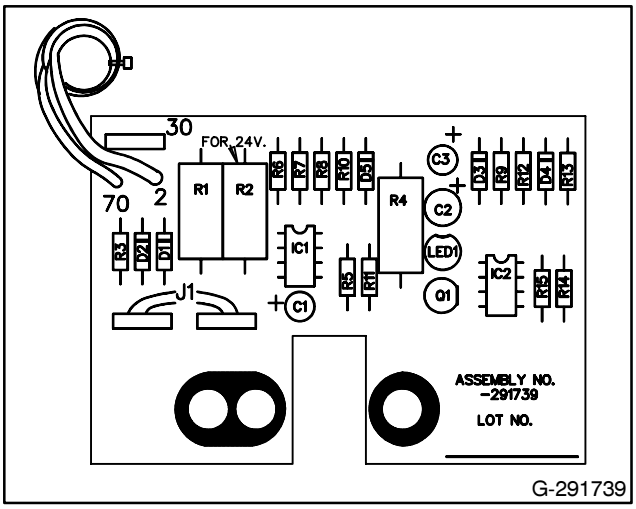

Figure 7-20. Overvoltage Circuit Board

Governor Adjustment

Mechanical Governor—Hoof 20-100 kW Ford-Powered Models

With the constant speed type governor, the throttle linkage is fixed at a definite length to establish a specific load speed of 1800 rpm (60 Hz) or 1500 rpm (50 Hz) models). Do not make any adjustment to the throttle linkage as any variation in speed causes frequency changes in output of the generator—for this reason only slight readjustment of speed is possible. If governor setting is too sensitive, hunting or speed surging will occur with changing load. If a considerable drop in speed is experienced when normal load is applied, adjust the governor for greater sensitivity. If one of the governor settings is readjusted, the other settings should be readjusted since each has an effect on the other. The governor components and adjustments are shown in Figure 7-21. With the generator set running at full or rated load, make speed and sensitivity adjustments.

Speed

Check speed with hand tachometer or frequency meter. Loosen locking nut on speed adjusting screw. Turn screw in clockwise direction to increase speed (and frequency) or in counter-clockwise direction to decrease speed. Lock nut at new setting. Follow this adjustment with sensitivity (droop) adjustment.

Sensitivity

Test under normal load conditions. If readjustment is needed, proceed as follows. To make governor control more sensitive, loosen the nut at bottom of adjusting eyebolt and tighten the top nut thereby drawing the head of the eyebolt closer to the governor arm pivot point. To make governor control less sensitive, loosen the top nut and tighten the bottom nut to move the head of the eyebolt away from the pivot point. After sensitivity is correct, tighten the nut that was previously loosened to lock the eyebolt at the the new setting. Recheck speed after sensitivity adjustment since changing this will also affect speed. Stop generator set.

NOTE

A speed droop of 3 Hz or 90 rpm between no load and full load is normal.

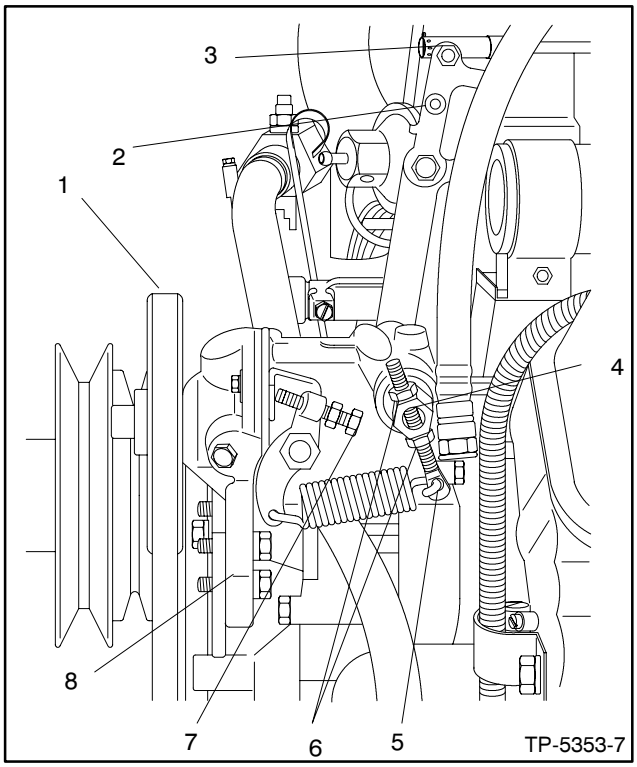

1. Governor Belt
2. Governor Arm
3. Throttle Linkage
4. Pivot Point
5. Eyebolt Head
6. Sensitivity Adjustment
7. Speed Adjustment
8. Governor Mounting

Figure 7-21. Governor Components and Adjustments

Mechanical Governor—Stanadyne 20-100 kW John Deere-Powered and 20-100 kW Detroit Diesel-Powered Models

NOTE

Before checking and adjusting engine speed, make sure engine has reached its normal operating temperature.

All speeds indicated apply to an engine hot under load. The maximum permissible speed variation is 50 rpm for fast idle speed.

1. Disconnect speed control from fuel injection pump lever and start engine.
2. Verify that injector pump lever is held in fast idle position against fast idle adjusting screw. See Figure 7-22. Using a tachometer, check engine speed. Adjust engine speed to obtain a full load engine speed of 1800 rpm (60 Hz) or 1500 rpm (50 Hz). To increase engine speed, rotate fast idle adjusting screw counterclockwise; rotate fast idle adjusting screw clockwise to decrease engine speed. Reconnect speed control to fuel injection pump lever. Stop generator set.

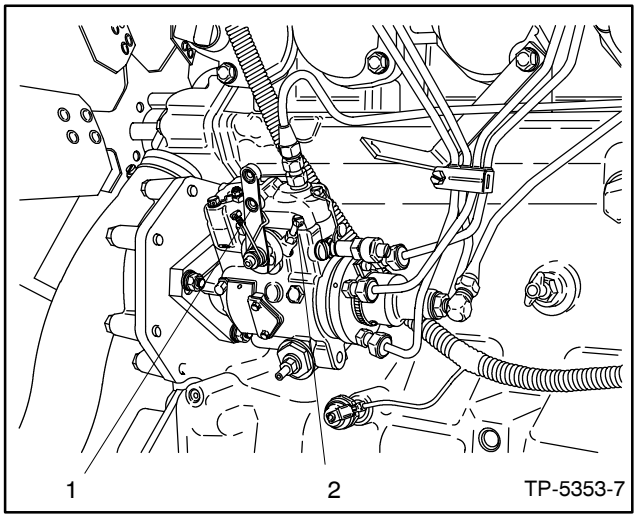

1. Injection Pump Lever
2. Fast Idle Adjusting Screw

Figure 7-22. Governor Adjustments—Typical

Mechanical Governor—Nippondenso 125-180 kW John Deere-Powered Models

NOTE

Before checking and adjusting engine speed, make sure engine has reached its normal operating temperature.

All speeds indicated apply to an engine hot under load. The maximum permissible speed variation is 50 rpm for fast idle speed.

1. Verify that injector pump lever is held in fast idle position against fast idle adjusting screw. See Figure 7-23.
2. Check fast idle engine speed. Engine speed should be 1800 rpm (60 Hz) or 1500 rpm (50 Hz) at full load.
3. If fast idle speed is incorrect (but not more than 50 rpm above or below the minimum/maximum specified settings), loosen fast idle adjusting screw lock nut.
4. If engine speed is too low, back out fast idle adjusting screw until speed is correct. If the engine speed is too high, turn fast idle adjusting screw in until correct speed is obtained. Tighten lock nut securely. Stop generator set.

NOTE

If the fast idle is 50 rpm above or below the minimum/maximum settings, have an authorized service dealer remove and adjust the pump on a test stand.

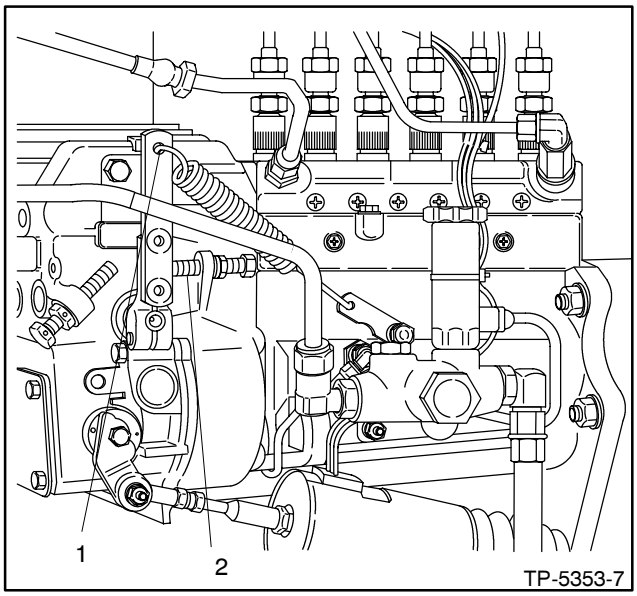

1. Injection Pump Lever
2. Fast Idle Adjusting Screw

Figure 7-23. Governor Adjustments

Mechanical Governor—Bosch P
125-180 kW Detroit Diesel-Powered Models

NOTE

Before checking and adjusting engine speed, make sure engine has reached its normal operating temperature.

All speeds indicated apply to an engine hot under load. The maximum permissible speed variation is 50 rpm for fast idle speed.

1. Verify that injector pump lever is held in fast idle position. See Figure 7-24.
2. Check fast idle engine speed. Engine speed should be 1800 rpm (60 Hz) or 1500 rpm (50 Hz) at full load.
3. If fast idle speed is incorrect (but not more than 50 rpm above or below the minimum/maximum specified settings), loosen fast idle adjusting lock nut.
4. If engine speed is too low, back out fast idle adjusting screw until speed is correct. If the engine speed is too high, turn fast idle adjusting screw in until correct speed is obtained. Tighten lock nut securely. Stop generator set.

   NOTE

   If the fast idle is 50 rpm above or below the minimum/maximum settings, have an authorized service dealer remove and adjust the pump on a test stand.

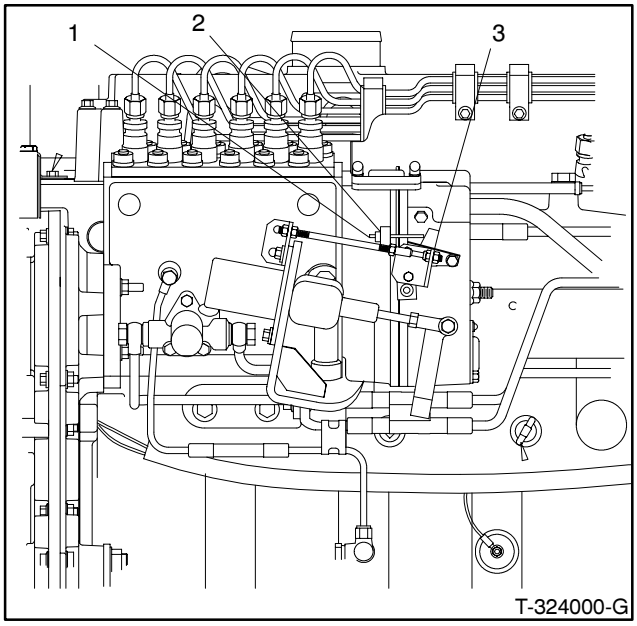

1. Fast Idle Adjusting Screw
2. Fast Idle Adjusting Lock Nut
3. Fuel Injection Pump Lever

Figure 7-24. Governor Adjustments

Electronic Governor—Barber-Colman Dyna 2500 20-100 kW Ford-Powered Models

Some generator sets are equipped with Barber-Colman electronic governors. This is an electronic device requiring no mechanical drive or hydraulic connection. The system consists of a magnetic pickup, an electronic control unit, and an actuator. The magnetic pickup monitors engine speed and transmits this information to the electronic control unit. See Figure 7-25. The electronic control unit interprets the signal from the magnetic pickup to control current input to the throttle actuator. The throttle actuator adjusts the throttle position on the engine. See Figure 7-26. Adjust the actuator shaft linkage for smooth, nonbinding operation and to hold the carburetor throttle lever in the closed position when the power is off. The magnetic pickup air gap is 0.014-0.028 in. (0.36-0.71 mm).

Preliminary Adjustments

1. Place generator master switch to OFF position. Generator set must not be running.
2. Set the gain adjustment three divisions from zero.

Final Adjustments

1. Place generator master switch to RUN to start generator set.
2. Adjust the control unit speed pot until the engine is operating at the desired rpm (50 or 60 Hz on the frequency meter).
3. If governing is unstable, turn gain pot slightly counterclockwise.

NOTE

Gain pot has internal stops a 0 and 100%.

4. With the engine running at no load, finalize gain adjustment. Turn the gain adjustment clockwise until the output shaft and linkage is stable. Upset the linkage by hand. If the linkage oscillates 3-5 times then stops, the setting is correct. Stop the generator set.

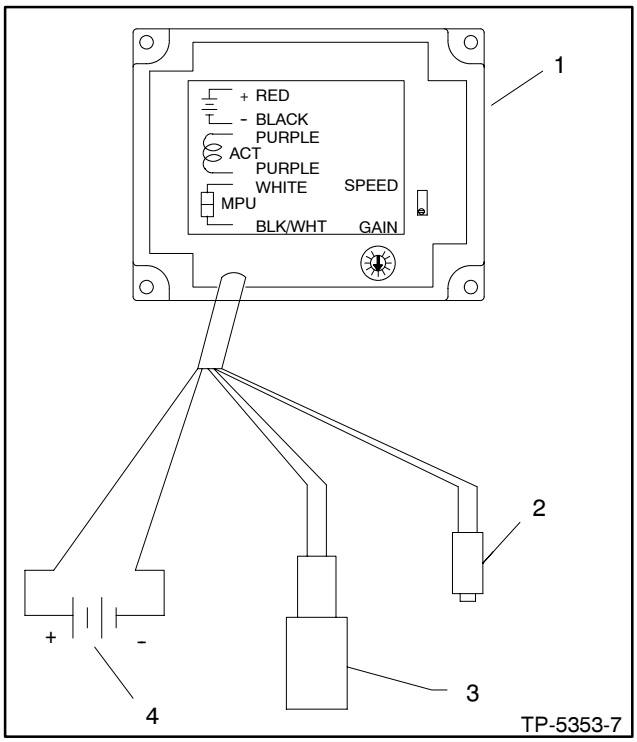

1. Control Unit
2. Magnetic Pickup
3. Actuator
4. 12-Volt Battery

Figure 7-25. Governor Control Unit

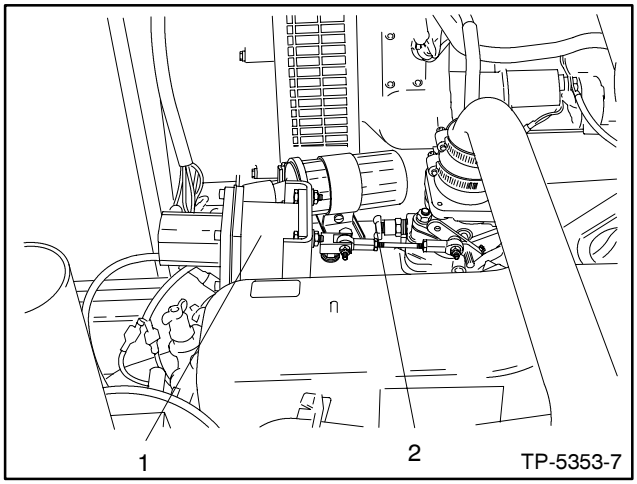

1. Actuator
2. Linkage

Figure 7-26. Throttle Actuator (Typical)

Electronic Governor—Barber-Colman Dyna 8000 125-300 kW Detroit Diesel-Powered Models (Early 20-100 kW John Deere-Powered and Early 20-100 kW Detroit Diesel-Powered Models)

Some sets are equipped with Barber-Colman Dyna 8000 electronic governors. Since this is an electronic device, no mechanical drive or hydraulic connection is required. The system consists of a magnetic pickup, an electronic control unit, and an actuator. The magnetic pickup monitors engine speed and transmits this information to the electronic control unit (see Figure 7-27). The electronic control unit interprets the signal from the magnetic pickup to control current input to the throttle actuator. The throttle actuator adjusts the throttle position on the engine. See Figure 7-28. Adjust the actuator shaft linkage to hold the fuel injection pump lever in the stop position when the power is off. The magnetic pickup air gap is 0.014-0.028 in. (0.36-0.71 mm).

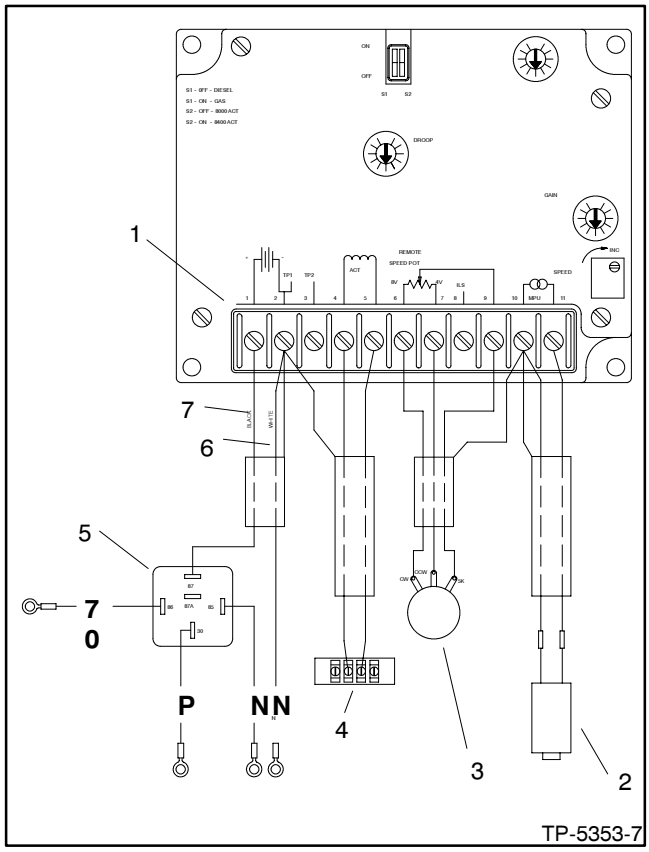

1. Control Unit: Terminal #1—Positive, Terminal #2—Negative
2. Magnetic Pickup
3. Optional Remote Speed Pot
4. Actuator
5. Relay
6. White Lead
7. Black Lead

Figure 7-27. Governor Control Unit

The Barber-Colman control unit is equipped with switches S1 and S2. Prior to making governor adjustments, verify that S1 and S2 are in the correct positions for your application. Switch S1 selects the controller response range based upon engine type. Set S1 to the OFF position for diesel models and to the ON position for gas/gasoline models. Place switch S2 to match the control unit of the governor actuator. In all cases, place switch S2 in the OFF position. These generators use the Dyna 8000 actuator.

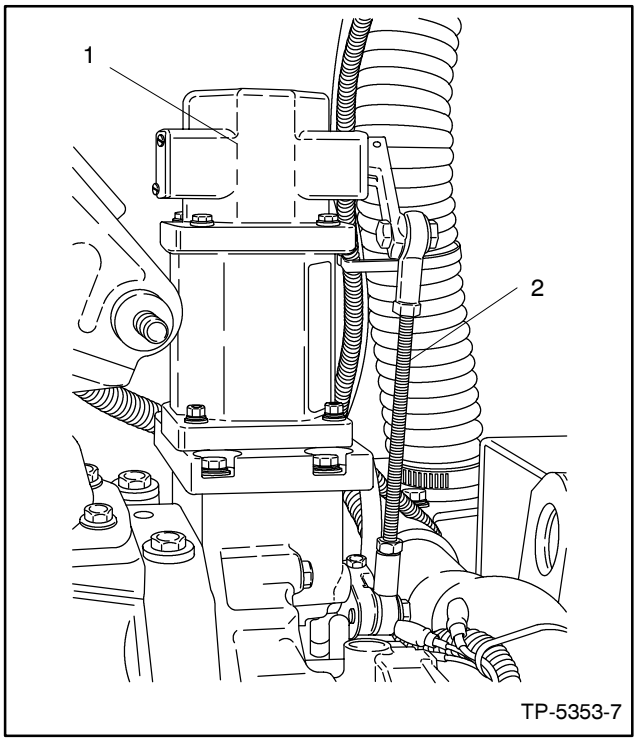

1. Actuator
2. Linkage

Figure 7-28. Throttle Actuator (Typical)

Preliminary Adjustments

1. Place generator master switch to OFF. Generator set must not be running.
2. Set the control unit “I” adjustment one division from zero and the gain adjustment at the third division from zero.
3. For isochronous operation, set the droop adjustment potentiometer counterclockwise to the minimum position. For droop operation, set droop potentiometer to desired droop. Droop adjustment may be necessary with parallel generator operation.
4. Position actuator lever to hold fuel pump lever in STOP position when power is off. Adjust the actuator linkage for smooth, nonbinding operation.

Final Adjustments

1. Place generator master switch to RUN or TEST position to start generator set.
2. Adjust the control unit speed potentiometer until the engine is operating at the desired rpm (50 or 60 Hz on the frequency meter).
3. If governing is unstable, turn “I” and gain potentiometers slightly counterclockwise.

NOTE

Except for the speed potentiometer, control unit pots have internal stops at 0 and 100%.

4. Slowly turn the gain adjustment potentiometer clockwise until the actuator level oscillates. (The actuator lever will waver faster than when the I potentiometer was adjusted.) Slowly turn gain adjustment potentiometer counterclockwise until the actuator lever is stable.
5. Jog the actuator lever by hand. If the actuator lever oscillates three to five times and then stabilizes, the gain setting is correct. If the actuator lever does not perform as described, proceed to Step 6.
6. Turn the gain potentiometer one division counterclockwise. Turn “I” potentiometer fully clockwise and watch the actuator lever. If the actuator lever does not become unstable, jog it by hand.
7. When the actuator lever wavers, slowly turn the “I” potentiometer counterclockwise until the lever is stable.
8. Jog the actuator lever by hand. It should waver from three to five times before stabilizing. The governor is now calibrated. Stop the generator set.

Electronic Governor—Barber-Colman Dyna 2500 125-180 kW John Deere-Powered Models

Some sets are equipped with Barber-Colman Dyna 2500 electronic governors. Since this is an electronic device, no mechanical drive or hydraulic connection is required. The system consists of a magnetic pickup, an electronic control unit, and an actuator. The magnetic pickup monitors engine speed and transmits this information to the electronic control unit (see Figure 7-29). The electronic control unit interprets the signal from the magnetic pickup to control current input to the throttle actuator. The throttle actuator adjusts the throttle position on the engine. See Figure 7-30. Adjust the actuator shaft linkage to hold the fuel injection pump lever in the stop position when the power is off. The magnetic pickup air gap is 0.014-0.028 in. (0.36-0.71 mm).

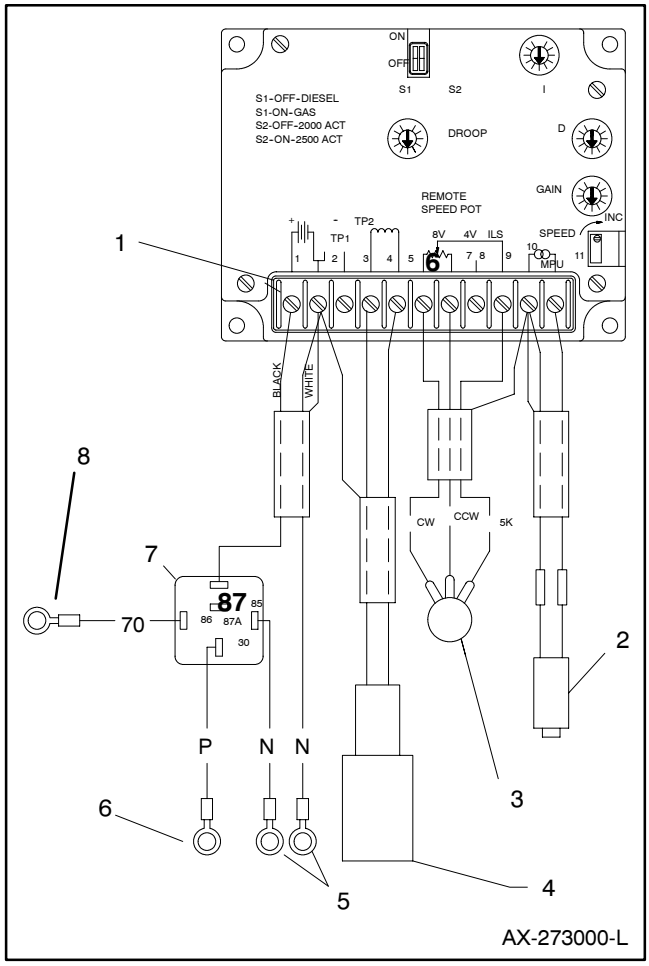

1. Control Unit: Terminal #1—Positive, Terminal #2—Negative
2. Magnetic Pickup
3. Optional Remote Speed Pot
4. Actuator
5. Connect to Ground Stud in Controller
6. Connect to Cranking Solenoid Battery (+)
7. Relay
8. Connect to 70 of Safeguard Breaker Terminal Block

Figure 7-29. Governor Control Unit

The Barber-Colman control unit is equipped with switches S1 and S2. Prior to making governor adjustments, verify that S1 and S2 are in the correct positions for your application. Switch S1 selects the controller response range based upon engine type. Place switch S1 to the OFF position for diesel models and to the ON position for gas/gasoline models. Place switch S2 to match the control unit of the governor actuator. In all cases, place switch S2 in the ON position. These generators use the Dyna 2500 actuator.

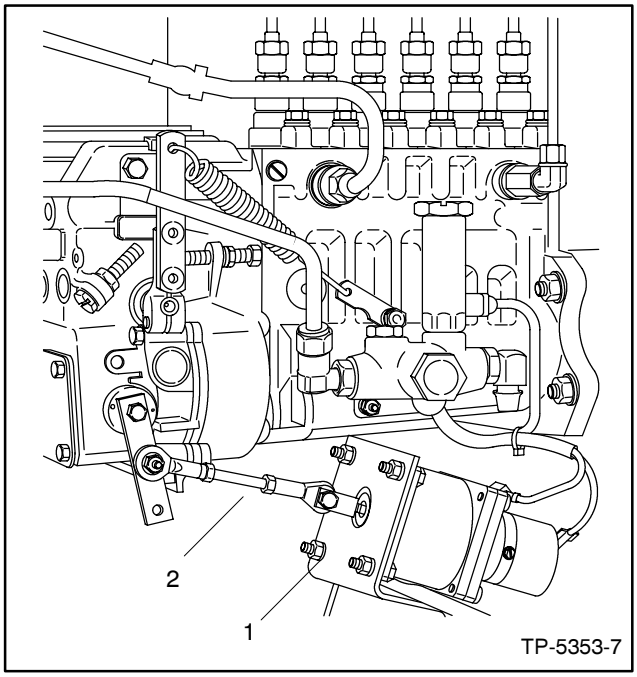

1. Actuator
2. Linkage

Figure 7-30. Throttle Actuator (Typical)

Preliminary Adjustments

1. Place generator master switch to OFF. Generator set must not be running.
2. Set the control unit “I” adjustment one division from zero, the D adjustment four divisions from zero, and the gain adjustment at the third division from zero.
3. For isochronous operation, set the droop adjustment potentiometer counterclockwise to the minimum position. For droop operation, set droop potentiometer to desired droop. Droop adjustment may be necessary with parallel generator operation.

NOTE

If the full stroke of the actuator shaft is used and the linkage is adjusted to use only the active fuel range, the maximum obtainable droop would be approximately 12% at full load.

4. Position actuator lever to hold fuel pump lever in STOP position when power is off. Adjust the actuator linkage for smooth, non-binding operation.

Final Adjustments

1. Place generator master switch to RUN or TEST position to start generator set.
2. Adjust the control unit speed potentiometer until the engine is operating at the desired rpm (50 or 60 Hz on the frequency meter).
3. If governing is unstable, turn “I” and gain potentiometers slightly counterclockwise.

NOTE

Except for the speed potentiometer, control unit pots have internal stops at 0 and 100%.

4. With the engine running at no load, finalize the “I”, “D”, and gain adjustments.
5. Slowly turn the gain adjustment potentiometer clockwise until the output shaft and linkage oscillates. Slowly turn gain adjustment potentiometer counterclockwise until the actuator lever is stable.
6. Jog the actuator lever by hand. If the actuator lever oscillates three to five times and then stabilizes, the gain setting is correct.
7. Turn the gain potentiometer one division counterclockwise. Turn the “D” adjustment fully clockwise while observing the actuator shaft. If the lever does not become unstable, jog it by hand. When the lever oscillates, turn the “D” adjustment counterclockwise slowly until the actuator shaft is stable. Jog the lever again, it should oscillate 3-5 times and then become stable. If the system response to load changes is satisfactory at this point, omit Step 8.
8. Turn I potentiometer fully clockwise and watch the actuator shaft. If the actuator lever does not become unstable, jog it by hand. When the actuator lever slowly oscillates, slowly turn the “I” potentiometer counterclockwise until the lever is stable.
9. Jog the actuator lever by hand. It should oscillate 3-5 times before stabilizing. The governor is now calibrated. Stop the generator set.

Electronic Governor—Barber-Colman Dyna 70025 using Stanadyne D Series Injection Pump 20-100 kW John Deere-Powered and 20-100 kW Detroit Diesel-Powered Models

Some sets are equipped with Barber-Colman Dyna 70025 electronic governor used in conjunction with a Stanadyne D Series injection pump. This particular set-up uses different governor controllers for a nonparalleling generator set or a paralleling generator set. The system consists of a magnetic pickup, an electronic control unit, and an actuator. The magnetic pickup monitors engine speed and transmits this information to the electronic control unit.

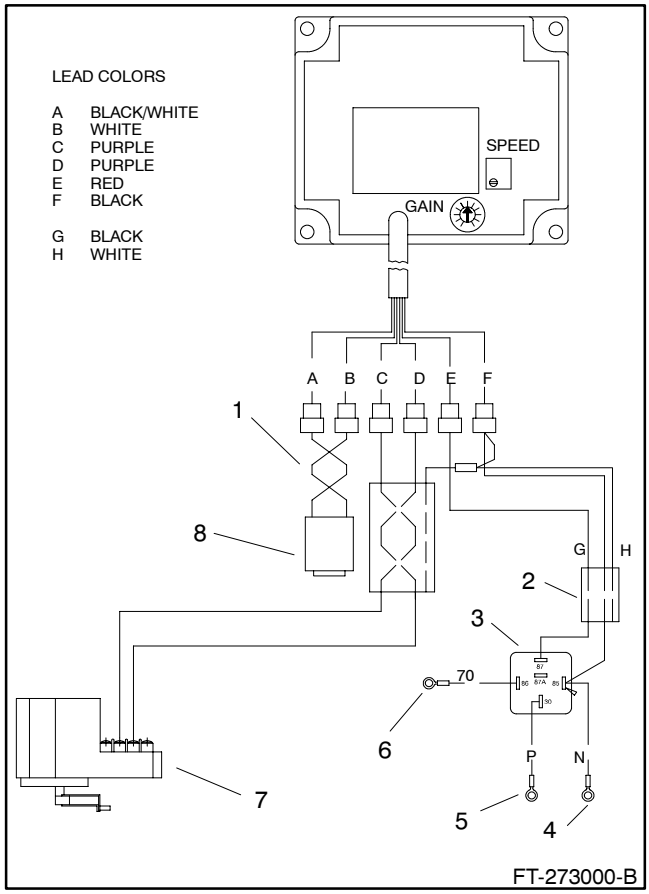

1. Twist Magnetic Pickup Leads Before Connecting to Controller. 1 turn per inch (25 mm)
2. Power Cable
3. Relay
4. Connect to Ground Stud in Controller
5. Connect to Cranking Solenoid Battery (+)
6. Connect to 70 of Safeguard Breaker Terminal Block
7. Actuator
8. Magnetic Pickup

Figure 7-31. Governor Control Unit (Nonparalleling Generator Set)

See Figure 7-31 for nonparalleling generator sets or Figure 7-32 for paralleling generator sets. The electronic control unit interprets the signal from the magnetic pickup to control current input to the throttle actuator. The integrated throttle actuator adjusts the throttle position internally in the fuel injection pump. See Figure 7-33. The magnetic pickup air gap is 0.014-0.028 in. (0.36-0.71 mm).

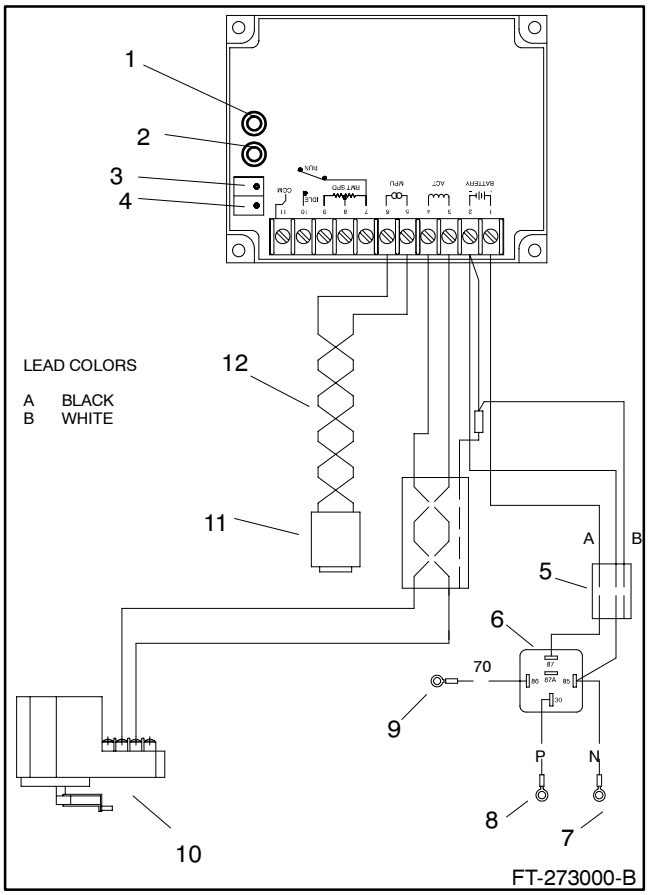

1. Droop Pot
2. Gain Pot
3. Idle Spd (Speed) Pot
4. Run Spd (Speed) Pot
5. Power Cable
6. Relay
7. Connect to Ground Stud in Controller
8. Connect to Cranking Solenoid Battery (+)
9. Connect to 70 of Safeguard Breaker Terminal Block
10. Actuator
11. Magnetic Pickup
12. Twist Magnetic Pickup Leads Before Connecting to Controller. 1 turn per inch (25 mm)

Figure 7-32. Governor Control Unit (Paralleling Generator Set)

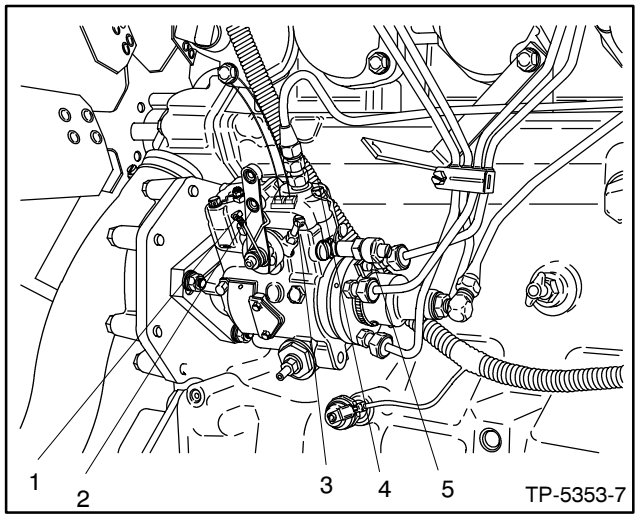

1. Low Idle Adjustment Screw
2. High Idle Adjustment Screw
3. Injector Pump/Actuator
4. Shutoff Shaft Assembly
5. Droop Adjusting Screw

Figure 7-33. Governor Adjustments—Typical

Actuator Calibration

The following procedure is used to setup the mechanical governor for operation with the electronic integrated actuator. Perform calibration of both the mechanical and electronic governor in order for the system to operate correctly. Lack of maximum power or poor steady state speed control results from incorrect calibration. See Figure 7-33.

NOTE

The actuator calibration procedure was performed at the factory and no additional adjustment is necessary. The actuator calibration procedure is done only if removal of fuel injection pump has occurred or the adjustment is questionable. Do not perform this procedure unless it is deemed necessary.

1. Position the shutoff shaft assembly in the fuel on position by moving it in the clockwise position. The shutoff shaft assembly is the lever located on the backside of the fuel injection pump. Secure using existing mechanical linkage.
2. Place the throttle shaft assembly in the high idle position. Back out the low idle adjustment screw a maximum of three turns. Excessive backing out of the low idle screw results in the disengagement of the pump's internal components.

NOTE

Follow this procedure carefully in order to not overspeed the engine and cause damage to the generator or other load.

3. Adjust the droop by turning the droop adjusting screw in a counterclockwise (CCW) direction until it stops. Droop adjustment used only on paralleling generator sets.

   Turn the droop adjusting screw clockwise (CW) two full turns. The mechanical governor is now set in a position that will permit starting the engine to calibrate the electronic integrated actuator governor. Do not operate the engine without the electronic governor connected and the system calibrated correctly as described in the following procedure. Once this droop adjustment is made, do not readjust.

Governor Calibration for Nonparalleling Generator Sets

Preliminary Adjustments

1. Place generator master switch to OFF position. Generator set must not be running.
2. Set the gain adjustment three divisions from zero.

Final Adjustments

1. Place generator master switch to RUN to start generator set.
2. Adjust the control unit speed pot until the engine is operating at the desired rpm (50 or 60 Hz on the frequency meter).
3. If governing is unstable, turn gain pot slightly counterclockwise.

NOTE

Gain pot has internal stops a 0 and 100%.

4. With the engine running at no load, finalize gain adjustment. Turn the gain adjustment clockwise until the output shaft and linkage is stable. Upset the linkage by hand. If the linkage oscillates 3-5 times then stops, the setting is correct. Stop the generator set.

Governor Calibration for Paralleling Generator Sets

Calibration Procedure

1. Place generator master switch to OFF. Generator set must not be running.
2. Set the gain pot at 30% and the droop pot completely counterclockwise (CCW).
3. Adjust the idle speed by turning the 20-turn pot clockwise (CW) to increase speed and counterclockwise (CCW) to decrease speed.
4. Adjust the run speed by turning the 20-turn pot clockwise (CW) to increase speed and counterclockwise (CCW) to decrease speed.
5. Place generator master switch to RUN or TEST position to start generator set.
6. Slowly turn the gain pot clockwise (CW) until the engine becomes unstable. After the engine becomes unstable, slowly turn the gain pot counterclockwise (CCW) until stable. Interrupt the governor by momentarily removing power from the governor. The engine should recover in 3-5 diminishing oscillation. Stop the generator set.

Droop Adjustment

1. Place generator master switch to RUN or TEST position to start generator set.
2. Use the run speed pot to set the engine rpm to the desired no load speed (frequency) on the frequency meter.
3. Apply full load to the generator set.
4. While watching the frequency meter, slowly turn the droop pot clockwise (CW) until the desired droop percentage is obtained.
5. Remove full load from generator set.
6. Using the run speed pot readjust the engine rpm to the desired no load speed (frequency) on the frequency meter. Stop the generator set.

Section 8. Generator Disassembly/Reassembly

Before beginning generator disassembly procedure, carefully read all safety precautions at the beginning of this manual. Please observe these precautions and those included in text during the disassembly/ reassembly procedure.

The following procedures cover many models and some steps may not apply to a particular engine. Use Figure 8-1 and Figure 8-2 to help understand component descriptions and general configuration of the generator.

Use the disassembly procedure as a step-by-step means to help take apart the generator. The disassembly procedure provides important information to minimize disassembly time and indicates where special configurations exist which may require taking notes. The reassembly procedure includes important alignment steps and provides critical torque specs.

⚠ WARNING

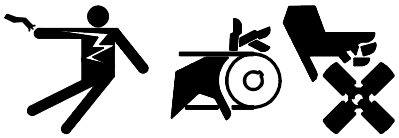

Accidental starting.
Can cause severe injury or death.

Disconnect battery cables before working on generator set (negative lead first and reconnect it last).

Accidental starting can cause severe injury or death. Turn generator set master switch to OFF position, disconnect power to battery charger, and remove battery cables (remove negative lead first and reconnect it last) to disable generator set before working on any equipment connected to generator set. The generator set can be started by automatic transfer switch or remote start/stop switch unless these precautions are followed.

⚠ WARNING

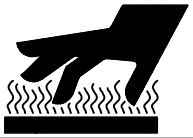

Hot engine and exhaust system.
Can cause severe injury or death.

Do not work on generator set until it is allowed to cool.

Hot parts can cause severe injury or death. Do not touch hot engine parts. An engine gets hot while running and exhaust system components get extremely hot.

⚠ WARNING

Explosive fuel vapors.
Can cause severe injury or death.

Use extreme care when handling, storing, and using fuels.

Explosive fuel vapors can cause severe injury or death. All fuels are highly explosive in a vapor state. Use extreme care when handling and storing fuels. Store fuel in a well-ventilated area away from spark-producing equipment and out of the reach of children. Never add fuel to the tank while the engine is running since spilled fuel may ignite on contact with hot parts or from ignition spark. Do not smoke or permit flame or spark to occur near potential sources of spilled fuel or fuel vapors. Keep fuel lines and connections tight and in good condition. Do not replace flexible fuel lines with rigid lines. Flexible sections are used to avoid breakage due to vibration. If any fuel leakage, fuel accumulation, or electrical sparks are noted, DO NOT OPERATE GENERATOR SET. Repair systems before resuming generator set operation

Explosive fuel vapors can cause severe injury or death. Take additional precautions when using the following fuels:

Gasoline—Store gasoline only in approved red containers clearly marked GASOLINE.

Propane (LP)—Adequate ventilation is mandatory. Propane is heavier than air; install gas detectors low in room. Inspect detectors often.

Perform the following steps prior to disassembling the generator set.

1. Disconnect (negative lead first) and remove starting batteries from work area to prevent fire hazard. Disconnect AC-powered accessories, such as battery charger, block heater, and fuel transfer pump.
2. Shut off fuel supply. Drain fuel system as necessary by emptying fuel into proper containers. Remove any fuel containers from work area to prevent fire hazard. Ventilate work area to clear fumes.
3. Disconnect fuel, cooling, and exhaust systems as necessary to tilt generator set. Disconnect output leads or load circuit cables at generator set.
4. Any cranes, hoists, or other lifting devices used in the disassembly or reassembly procedure must be rated for the weight of the generator set. Check generator set nameplate or spec sheet for weight.

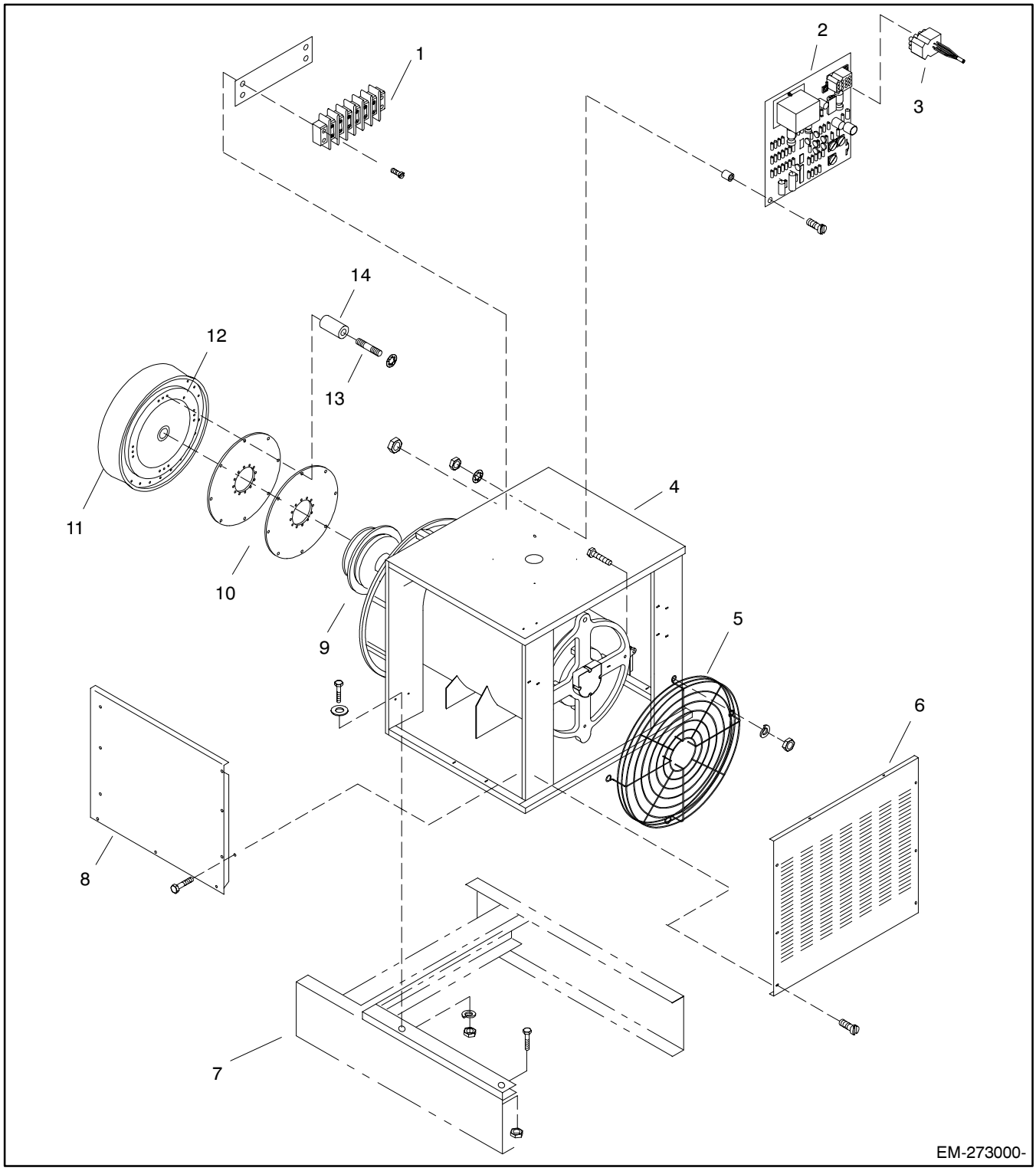

1. Voltage Regulator Terminal Strip
2. Voltage Regulator
3. Voltage Regulator Wiring Harness
4. Junction Box
5. Generator Guard
6. Junction Box Rear Cover
7. Skid
8. Junction Box Side Cover
9. Alternator Assembly
10. Drive Discs
11. Engine Side of Flywheel
12. Flywheel
13. Stud
14. Spacer

Figure 8-1. Generator Components (Typical)

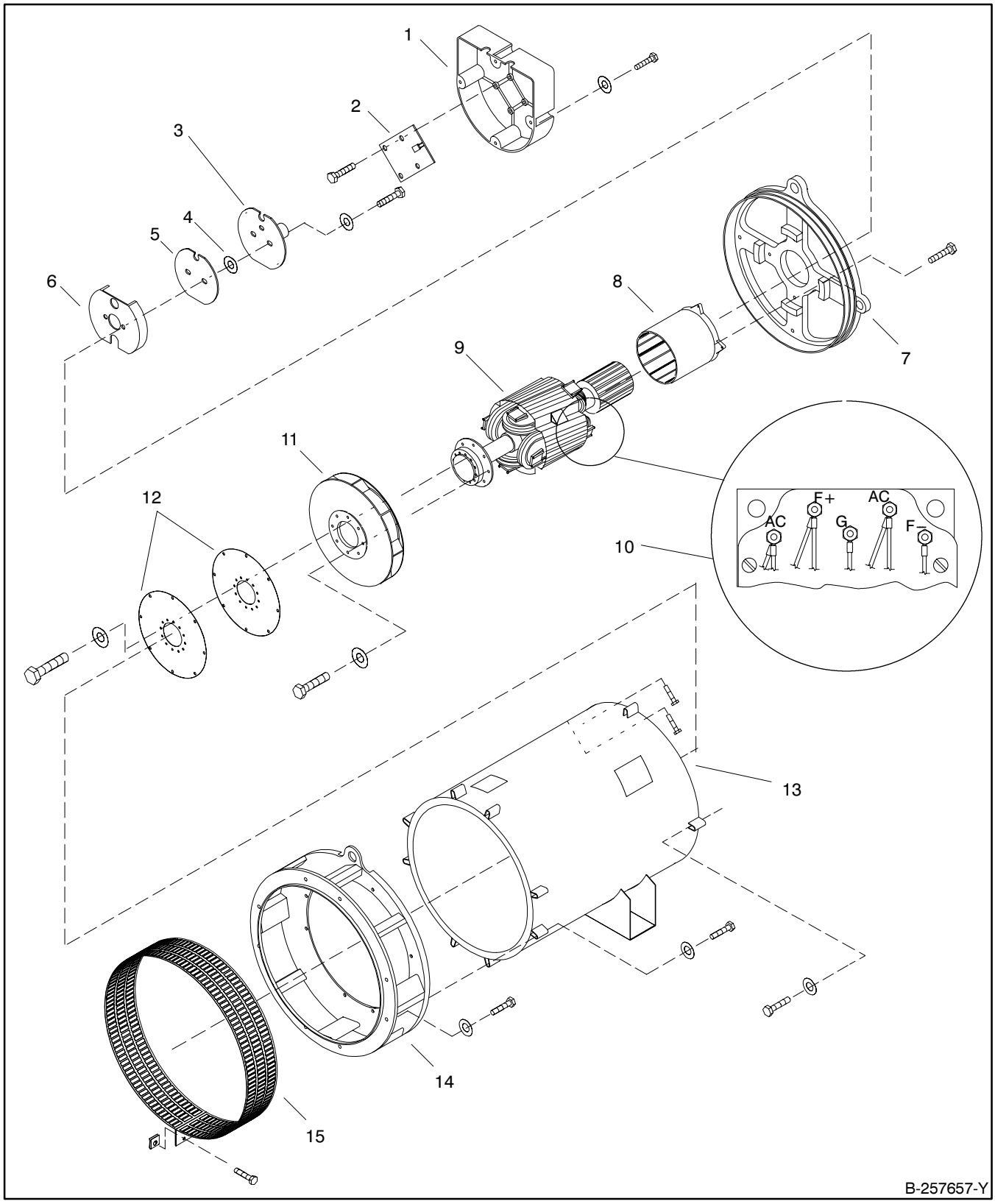

1. LED Circuit Board Cover
2. LED Circuit Board
3. Photo Transistor Board
4. Insulating Washer
5. Insulator
6. Magnetic Actuator
7. End Bracket
8. Exciter Field Assembly
9. Rotor Assembly
10. SCR Assembly
11. Generator Fan
12. Drive Discs
13. Stator Assembly
14. Generator Adapter
15. Generator Fan Guard

Figure 8-2. Generator Components (Typical)

Disassembly

1. Disconnect all controller-to-engine and engine-to-generator harnesses and wiring. Disconnect alarm horn circuit board connector (if equipped), LED board and housing, and speed sensor. Remove junction box and controller as a unit.
2. Remove bolts from generator vibromounts.
3. Suspend the generator at both ends with hooks in lifting eyes. Use a hoist to raise generator end off vibromounts. See Figure 8-3.

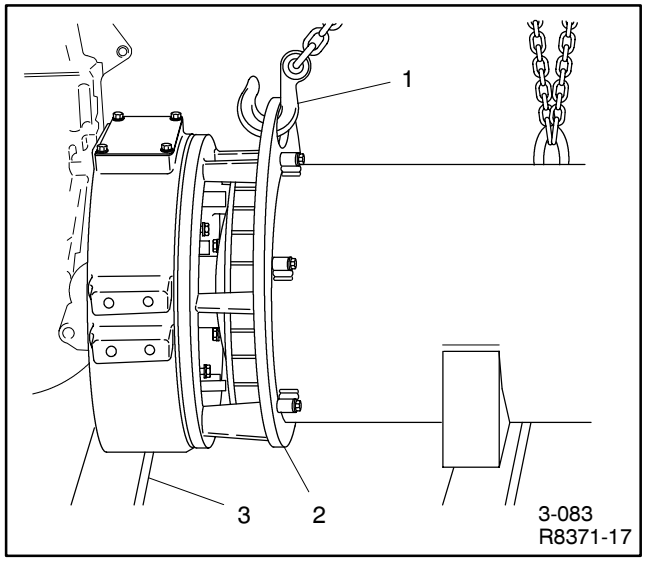

1. Hook
2. Generator Adapter
3. Wood Block(s)

Figure 8-3. Hoisting Generator

4. Support the engine by placing wood blocks under flywheel housing. Lower generator end until generator flywheel housing rests on blocks. See Figure 8-3.
5. Remove fan guard. Remove bolts holding adapter to flywheel housing.

NOTE

Later 20-100 kW Ford-powered models use a generator adapter that serves as the flywheel housing. The stator attaches to the generator adapter/flywheel housing. Do not remove generator adapter/flywheel housing from stator assembly unless replacing the stator assembly.

6. Remove nuts and spacers holding drive discs to flywheel.

NOTE

The 200-300 kW Detroit Diesel-powered models use screws and hardened washers to mount drive discs to flywheel. The 33-45 kW (6 cylinder) Ford-powered models use screws and spacers to mount drive discs to flywheel.

7. Work drive discs over studs (if equipped) to separate generator from engine. See Figure 8-4.

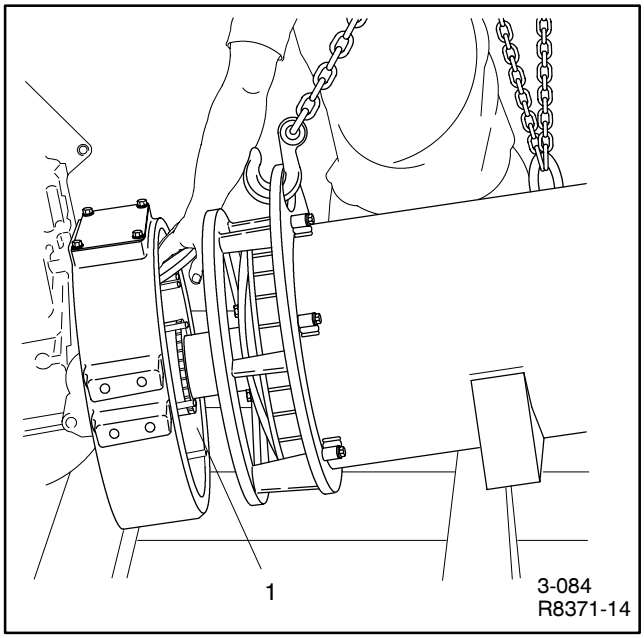

1. Drive Discs

Figure 8-4. Separating Generator and Engine

8. Set the generator assembly on the floor in a horizontal position. Remove support slings or chains.
9. To remove the rotor assembly, hook hoist to adapter and place generator assembly on floor in a vertical position. See Figure 8-5. Before lowering assembly, place boards along the edge of end bracket to prevent damage to photo transistor board.

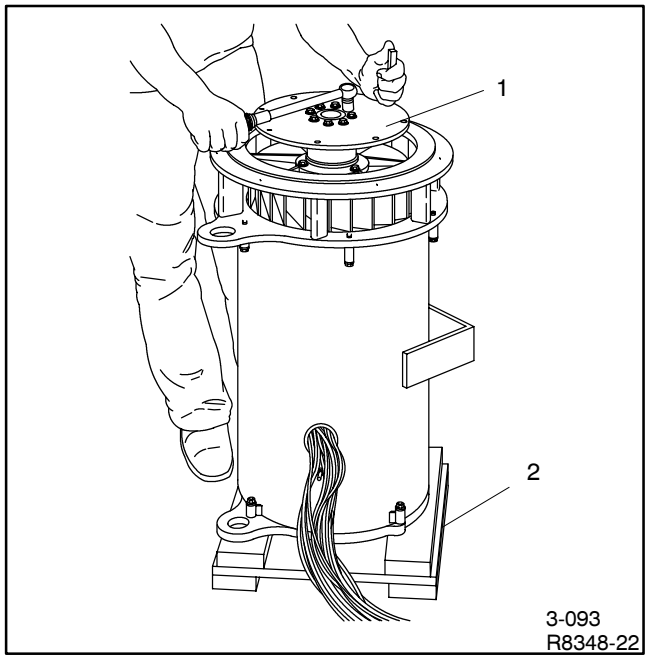

1. Drive Disc Removal
2. End Bracket Support

Figure 8-5. Generator Support, Drive Disc and Fan Removal

10. Remove drive discs and fan from generator assembly. See Figure 8-5.

NOTE

Some 50-100 kW Ford-powered models use a special drive disc (flywheel) mounted to the rotor shaft. The special drive disc (flywheel) had a lip on the outer circumference and was not a flat surface drive disc. Later models use a flat surface drive disc.

11. Fasten lifting eye and hoist hook to rotor flange. Hoist rotor carefully to avoid damaging exciter armature or exciter field magnets. See Figure 8-6.
12. While rotor is suspended, remove photo transistor board and actuator cup. Remove F3, G, and AC leads from SCR assembly. Cut off photo transistor board terminals to remove circuit board. If photo transistor board is reused, leave leads as long as possible.
13. Slowly lower rotor to horizontal position. Set the rotor on a wooden surface. Take care not to damage windings, laminations, or bearing. See Figure 8-7.

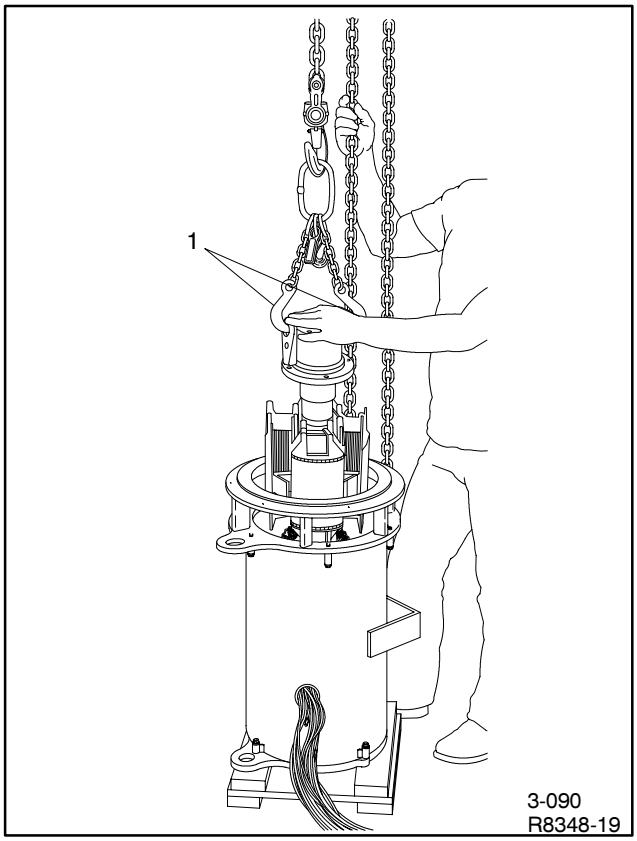

1. Hoist Hook Locations

Figure 8-6. Rotor Removal

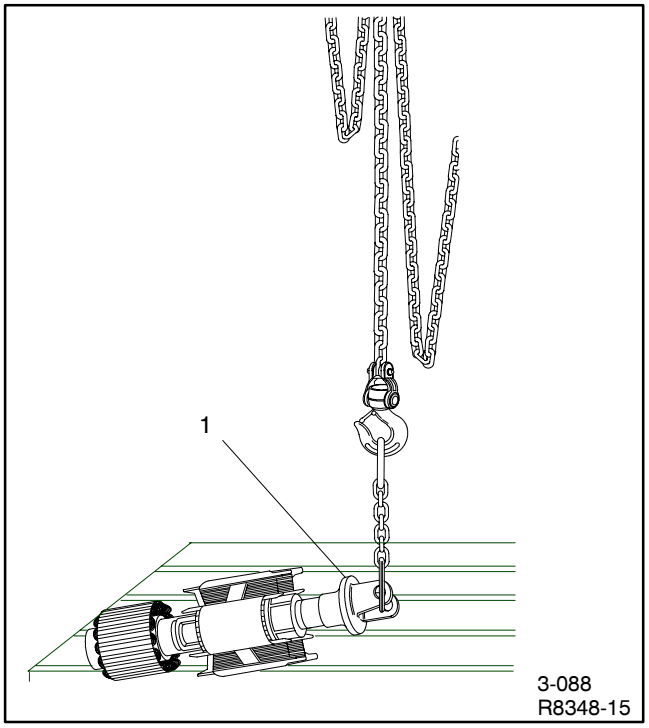

1. Rotor Assembly

Figure 8-7. Lowering Rotor

14. Place the generator assembly on the generator adapter end in order to remove the generator adapter and end bracket from the stator. Fasten chains to generator adapter and lower to a horizontal position. Fasten hook to end bracket eye and hoist to a vertical position. See Figure 8-8.

NOTE

Some 50-100 kW Ford-powered models use a special drive disc (flywheel) mounted to the rotor shaft. The special drive disc (flywheel) had a lip on the outer circumference and was not a flat surface drive disc. Later models use a flat surface drive disc.

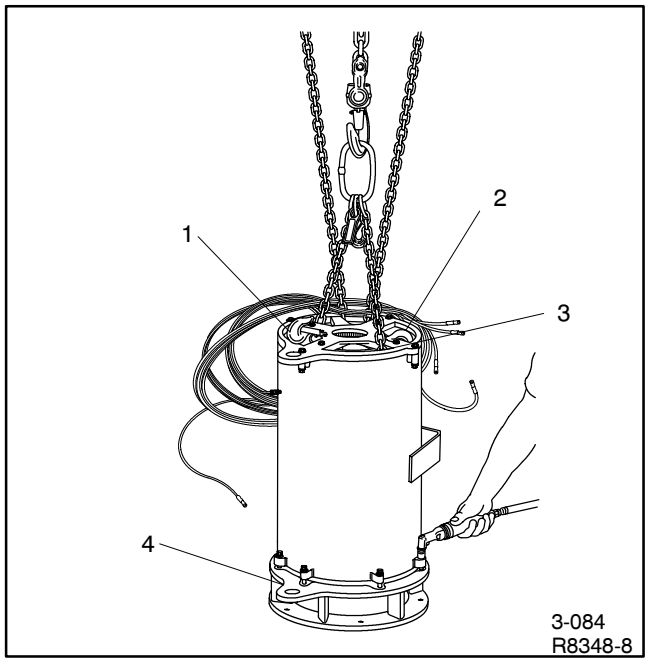

1. Hoist Hook
2. Hoist Hook
3. End Bracket
4. Adapter

Figure 8-8. Removing Generator Adapter

15. Remove generator adapter mounting bolts. Fasten hoist hooks to end bracket and raise assembly slightly. Bump generator adapter loose by using a rubber mallet.

NOTE

Some 50-100 kW Ford-powered models use a special drive disc (flywheel) mounted to the rotor shaft. The special drive disc (flywheel) had a lip on the outer circumference and was not a flat surface drive disc. Later models use a flat surface drive disc.

16. Lower stator assembly. Remove end bracket mounting bolts. Separate end bracket from stator by bumping loose with a rubber mallet.
17. Remove exciter magnets from end bracket. See Figure 8-9.

NOTE

Some early models are equipped with a tolerance ring inside the end bracket bore.

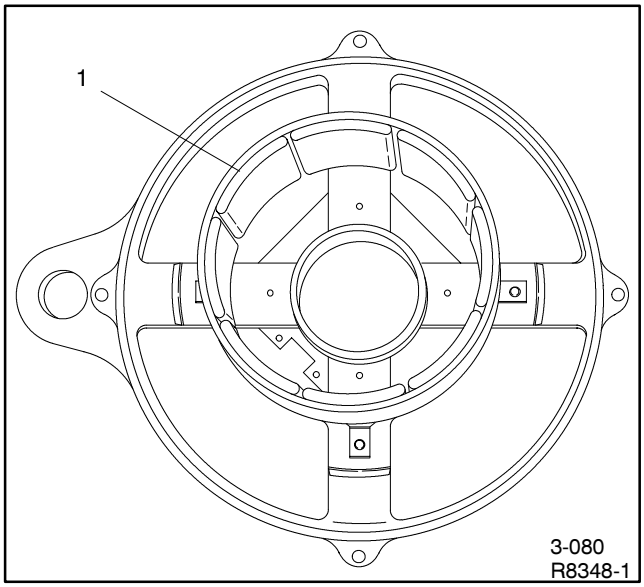

1. Exciter Magnets

Figure 8-9. End Bracket View

Reassembly

1. Attach exciter field to end bracket with four mounting screws. See Figure 8-9.

NOTE

Some early models are equipped with a tolerance ring inside the end bracket bore. Install a new tolerance ring when reinstalling end bracket.

2. Place stator in a vertical position with end bracket side up.

NOTE

End bracket side of stator has four mounting bosses.

3. Place end bracket on stator and use bolts to align holes. Use a rubber mallet to mount end bracket flush with stator. See Figure 8-10.

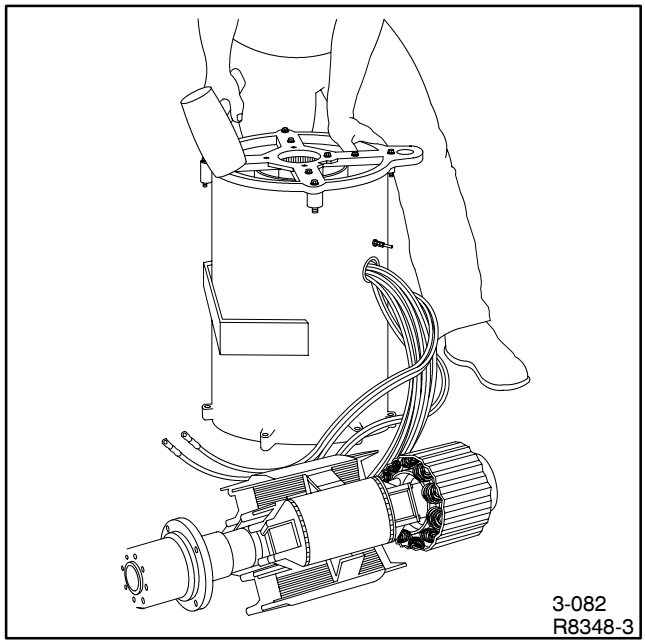

Figure 8-10. Mounting End Bracket on Stator

NOTE

Position end bracket housing eye opposite the stator mounting bracket during reassembly.

NOTE

Early models use a skewed (slanted) stator with a straight rotor. When replacing either rotor or stator, be sure replacement is the same as the original. Use dissimilar rotor and stator styles (skewed rotor with straight stator or straight rotor with skewed stator) when reassembling the generator set.

4. Install bolts and washers to attach end bracket to stator. Torque bolts to 35 ft. lbs. (47 Nm) maximum.
5. Attach hoist hooks to end bracket and suspend stator. Place the generator adaptor on the floor and lower stator to within 1/2-1/4 in. (12.7-6.4 mm) of the adapter lip. See Figure 8-11.

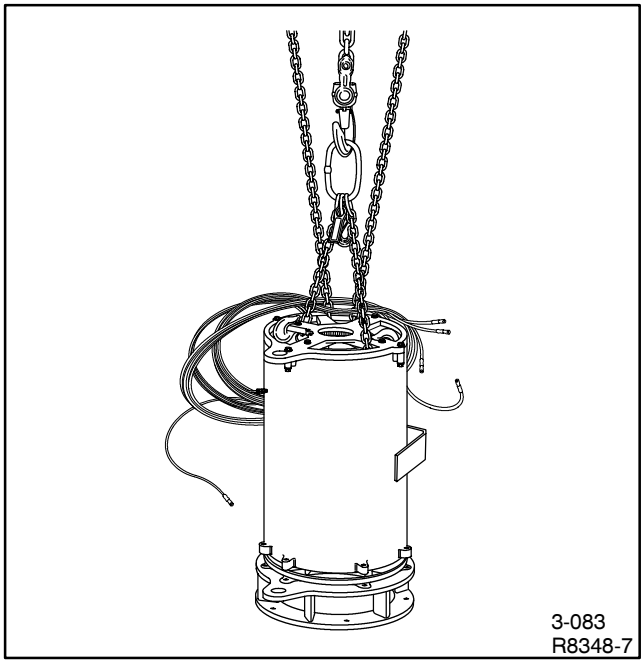

Figure 8-11. Aligning Adapter and Stator

6. Align adapter with stator and start bolts with washers. Lower stator onto adapter and finish tightening bolts.

NOTE

Position adapter hoisting eye so that it is opposite of the stator mounting bracket and directly below end bracket hoisting eye.

7. Place the generator assembly on the end bracket end when installing the rotor. Fasten hoisting hook to end bracket eye and lower generator assembly to a horizontal position.

8. Attach hoisting hooks to the adapter as shown in Figure 8-12. Suspend generator assembly. Before lowering the generator, place boards along the edge of the end bracket. Maintain a 1 in. (25 mm) clearance underneath the center of the end bracket to prevent damage to the photo transistor board and actuator cup when the rotor in installed.

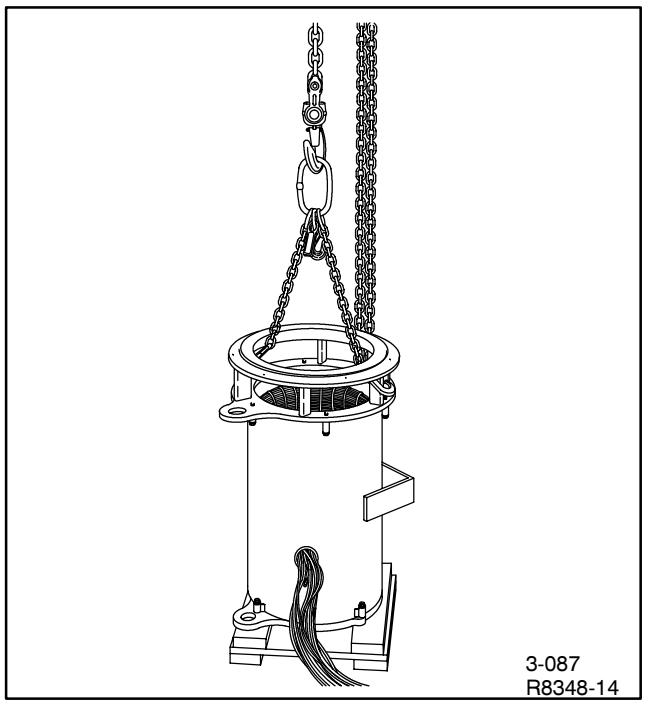

Figure 8-12. Supporting Generator Assembly

9. Fasten the lifting eye and hoist hook to rotor flange. See Figure 8-13. Hoist the rotor to a vertical position taking care not to damage windings, laminations, or bearing.

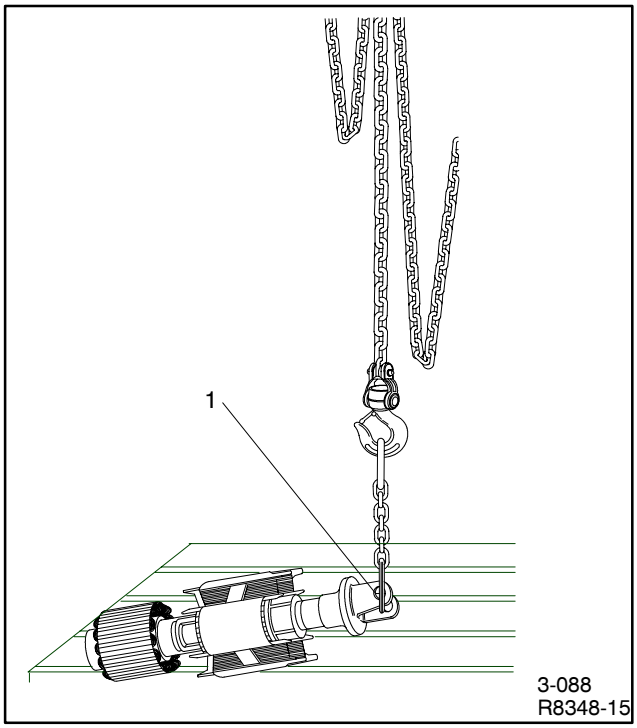

1. Hoist Hook

Figure 8-13. Hoisting Rotor

10. While the rotor is suspended install the photo transistor board, insulator board, and actuator cup. Place photo transistor board lead through actuator cup as shown in Figure 8-14. Push lead through hole in rotor shaft and then through exciter laminations ending near SCR assembly.

NOTE

Early model generators use insulator washers to insulate the photo transistor board from the actuator cup. If the unit is disassembled, substitute the insulator washers with the insulated board (available as service part no. 257850).

⚠ WARNING

Hazardous voltage.

Moving rotor.

Can cause severe injury or death.

Do not operate generator set without all guards and electrical enclosures in place.

Hazardous voltage can cause severe injury or death. Be sure that foil side of photo transistor board, end of shaft, and threaded holes are clean and free of metal particles and chips. Metal debris may short-circuit photo transistor board and cause hazardous voltage in generator set. AC voltmeter must show correct output before generator set may be reconnected to load.

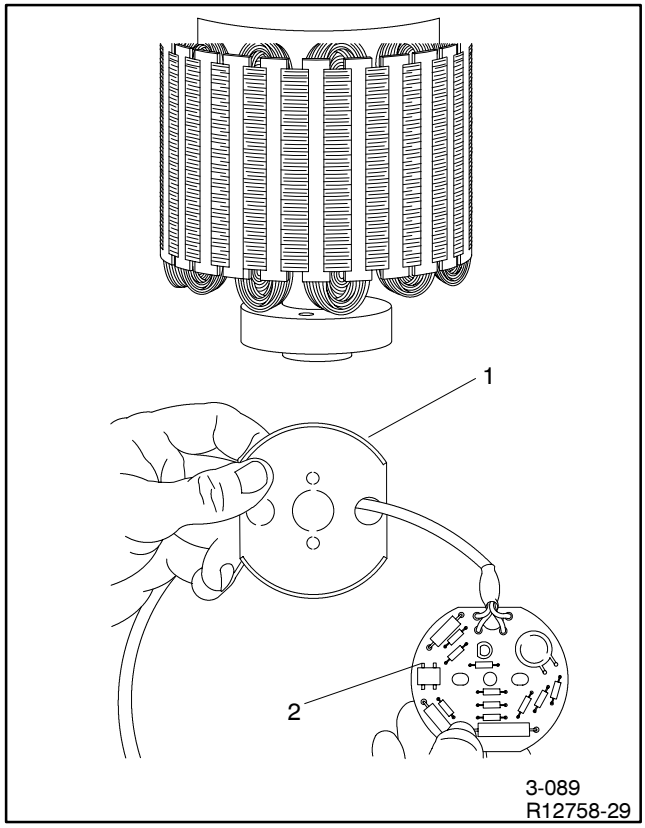

1. Magnetic Actuator
2. Photo Transistor Board

Figure 8-14. Installing Photo Transistor Board

11. Attach photo transistor board and magnetic actuator to end of rotor shaft with two mounting screws. See Figure 8-15. Cut off excess lead wire, leaving enough wire to reach SCR assembly. Strip 2-3 in. (50-75 mm) of gray insulator jacket from lead. Cut off all exposed uninsulated wire. Strip about 1/4 in. (0.6 mm) of insulation on red and black leads and crimp on #8 electrical terminals (part no. X-283-7). Before connecting to SCR studs, secure leads with tie wraps. Reconnect photo board white lead to SCR AC stud, red lead to F+ stud, green lead to G stud, and black lead to remaining AC stud. Secure leads with stop nuts. Torque connections to 8 in. lbs. (0.9 Nm) maximum.

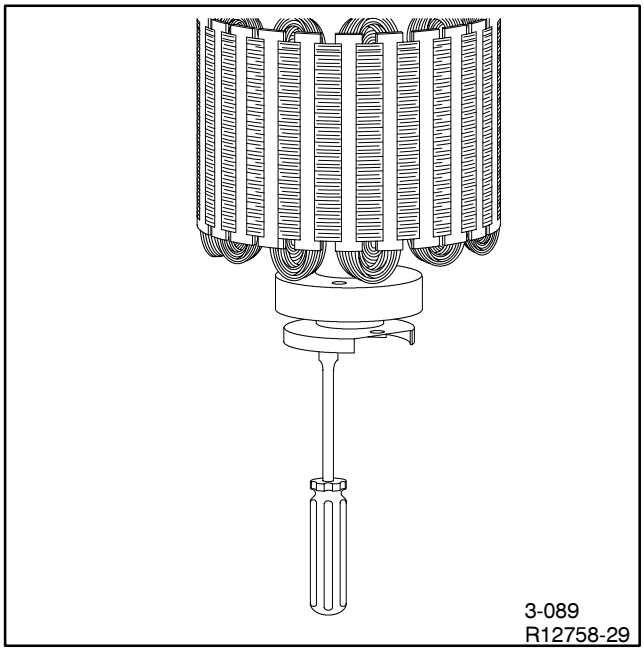

Figure 8-15. Mounting Photo Transistor Board and Magnetic Actuator

12. Suspend the rotor over the generator assembly. Lower the rotor field into stator. Be extremely careful while lowering the rotor to avoid damaging the exciter armature, field magnets, stator windings, or rotor laminations. See Figure 8-16. Carefully align rotor bearing into end bracket. Check for an outer race measurement of 1/4 in. (0.6 mm) from bracket to bearing. Make sure the photo transistor board and actuator cup have clearance below the end bracket.

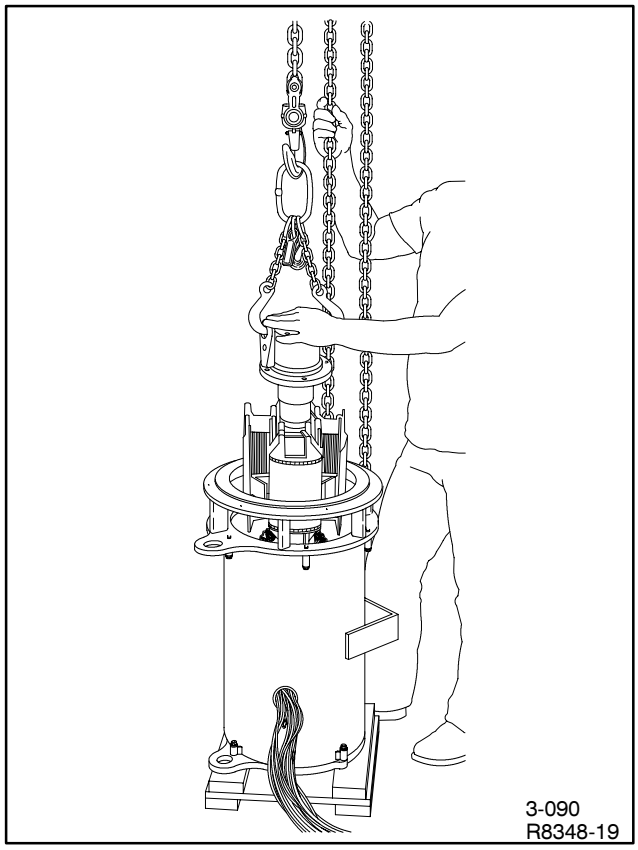

Figure 8-16. Installing Rotor

13. Place fan over rotor flange and torque bolts to 260 in. lbs. (29 Nm).

14. Attach drive disc(s) to end of rotor shaft. Torque drive disc(s) mounting bolts to 50 ft. lbs. (68 Nm).

NOTE

Some 50-100 kW Ford-powered models use a special drive disc (flywheel) mounted to the rotor shaft. The special drive disc (flywheel) had a lip on the outer circumference and was not a flat surface drive disc. Later models use a flat surface drive disc.

15. Attach hoist to adapter eye and place generator assembly in a horizontal position. Take care not to damage rotor or stator. Place hoisting eyes of generator to the top.

16. Thread studs (if so equipped) into flywheel as shown in Figure 8-17. Install studs completely into flywheel. Apply Loctite® No. 271 red to stud threads and install into flywheel. Apply Loctite® No. 242 blue to stud threads on nut side.

NOTE

Some 50-100 kw Ford powered models use a short spacer *between* flywheel and drive disc.

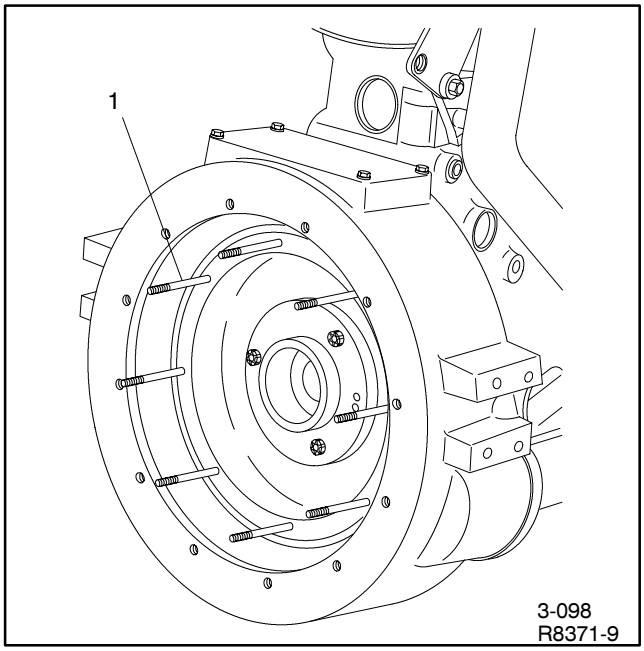

1. Flywheel Studs

Figure 8-17. Flywheel Studs

17. Place hoist hooks into end bracket and adapter eye. Raise generator assembly and align studs with drive discs by turning the flywheel. Move generator as necessary to work drive discs over studs. When drive discs are about 1 in. (25 mm) over studs, install spacers if so equipped. See Figure 8-18.

NOTE

Some models mount drive discs to flywheel using bolts. Some applications use hardened washers.

Loctite® is a registered trademark of Loctite Corporation.

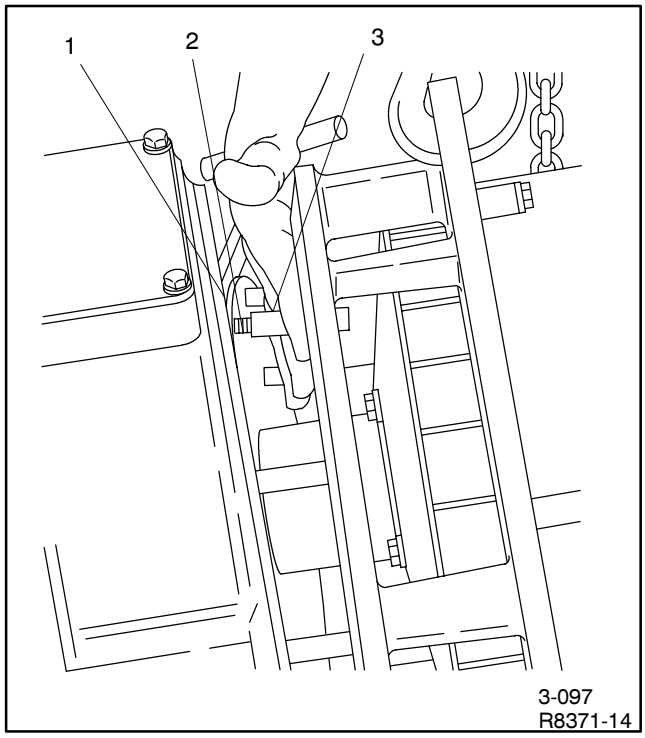

1. Drive Discs
2. Studs
3. Spacers

Figure 8-18. Installing Spacers

18. Move generator as necessary to align generator adapter and flywheel housing. Fasten and final tighten adapter to flywheel housing using bolts and hardened lock washers. See Figure 8-19. Torque bolts to value given in Section 1—Specifications, Generator.

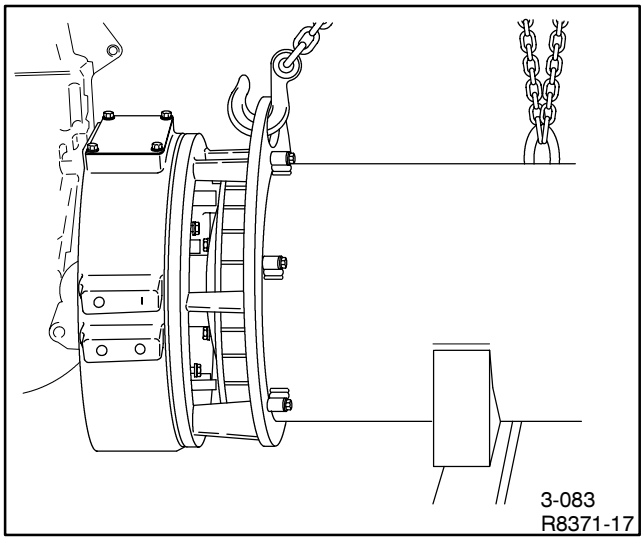

Figure 8-19. Aligning Adapter and Flywheel Housing

19. Install nuts on studs. Do not final tighten at this time.

NOTE

Some models mount drive discs to flywheel using bolts. Some applications use hardened washers.

20. Hoist generator and engine slightly to remove wood block(s) from under flywheel housing. Align generator assembly and skid. Lower generator and tighten vibromount mounting bolts.
21. Remove chains or slings used for suspending generator. Final tighten drive discs to flywheel. Torque hardware to values given in Section 1—Specifications, Generator.
22. Install fan guard.

23. Install and set speed sensor air gap at 0.014-0.028 in. (0.36-0.71 mm). See Figure 8-20. Replace LED board/housing assembly to end bracket.

24. Reinstall junction box and controller. Reconnect all controller-to-engine and engine-to-generator harnesses and wiring. Refer to wiring diagrams as required.

25. Reconnect fuel, cooling, and exhaust systems that were disconnected during disassembly. Reconnect output leads or load circuit cables at generator. Open fuel supply valve.

26. Reconnect starting batteries, negative lead last. Connect any AC-powered accessories such as battery charger, block heater, fuel transfer pump, etc.

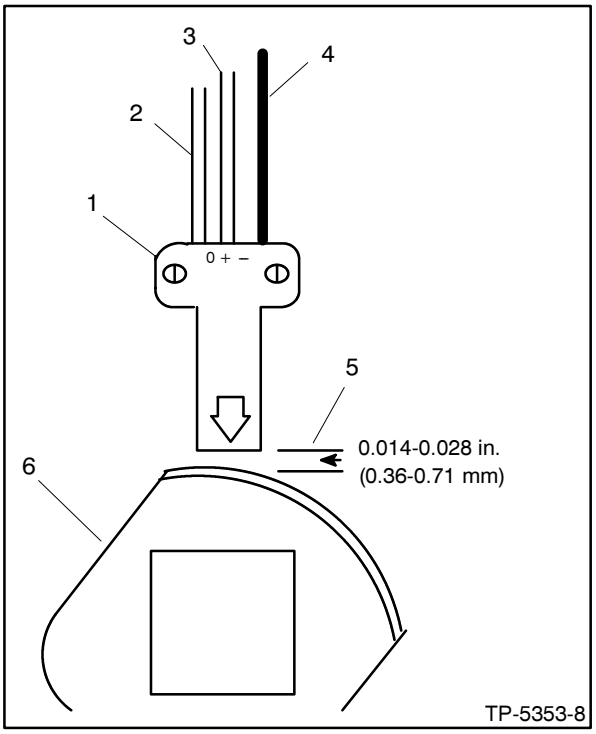

1. Speed Sensor
2. Wire 16: White/Clear
3. Wire 24: Red
4. Wire 2: Black
5. Air Gap: 0.014-0.028 in. (0.36-0.71 mm)
6. Actuator Cup

Figure 8-20. Speed Sensor Air Gap

Section 9. Generator Reconnection

Voltage Reconnection Procedure

This reconnection procedure details voltage reconnections only. If frequency changes are required, the governor and voltage regulator will need adjustment. See Generator Frequency Change and Adjustment for information regarding frequency adjustment.

To illustrate the proper reconnection of 12-lead generator sets, the following information is provided. In all cases, follow the National Electrical Code (NEC) guidelines.

Reconnect the stator leads of the generator set if a different output phase or voltage is desired. Refer to the following procedure and the connection schematics following. Follow all safety precautions at the front of this manual and in the text during this procedure.

NOTE

Affix notice to generator set after reconnecting to a voltage different than the nameplate. Order voltage reconnection decal 246242 from authorized service distributors/dealers.

⚠ WARNING

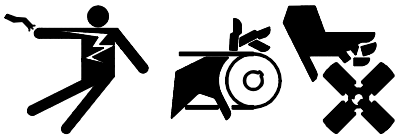

Accidental starting.
Can cause severe injury or death.

Disconnect battery cables before working on generator set (negative lead first and reconnect it last).

Accidental starting can cause severe injury or death. Turn generator set master switch to OFF position, disconnect power to battery charger, and remove battery cables (remove negative lead first and reconnect it last) to disable generator set before working on any equipment connected to generator set. The generator set can be started by automatic transfer switch or remote start/stop switch unless these precautions are followed.

⚠ WARNING

Hazardous voltage.

Moving rotor.

Can cause severe injury or death.

Do not operate generator set without all guards and electrical enclosures in place.

Hazardous voltage can cause severe injury or death. Whenever electricity is present, there is the hazard of electrocution. Open main circuit breaker on all power sources before servicing equipment. Electrically ground the generator set and electrical circuits when in use. Never come into contact with electrical leads or appliances when standing in water or on wet ground, as the chance of electrocution is increased under such conditions.

Hazardous voltage can cause severe injury or death. Short circuits can cause bodily injury and/or equipment damage. Do not contact electrical connections with tools or jewelry while adjustments are made. Remove wristwatch, rings, and jewelry that can cause short circuits.

1. Move generator set master switch to OFF/RESET position.
2. Disconnect engine starting battery, negative (–) lead first. Disconnect power to battery charger (if equipped).
3. Select desired voltage connection from Figure 9-1. Route leads through current transformers and connect according to the diagram for desired phase and voltage.

   NOTE

   Position current transformers CT1, CT2, and CT3 with dot or HI side toward generator set.

   NOTE

   Current transformers (CTs) are only used on generator sets equipped with controllers with meters and/or safeguard circuit breakers.

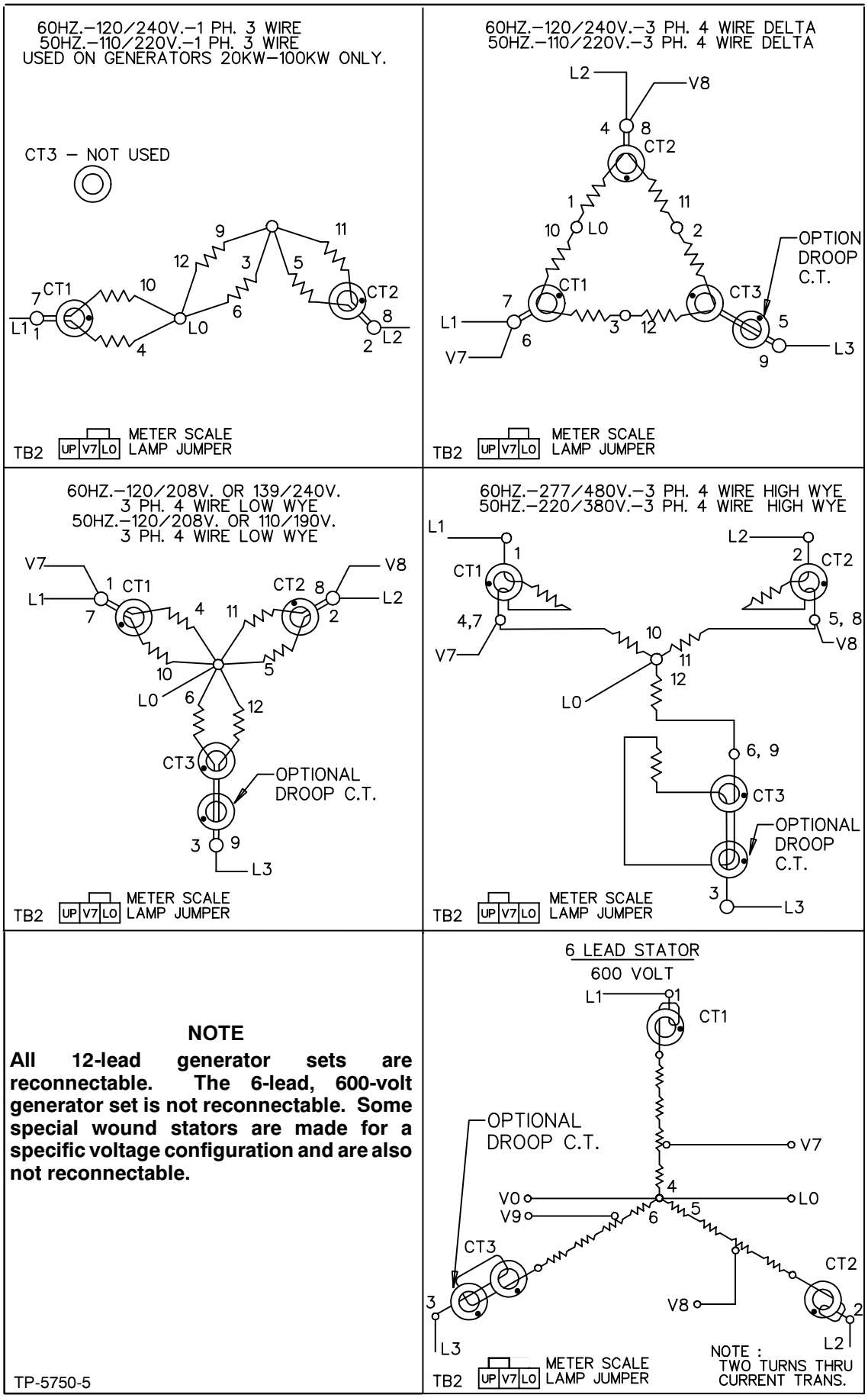

NOTE

All 12-lead generator sets are reconnectable. The 6-lead, 600-volt generator set is not reconnectable. Some special wound stators are made for a specific voltage configuration and are also not reconnectable.

Figure 9-1. Generator Reconnections

4. If controller is equipped with meters, remove controller cover and reposition meter scale lamp jumper (see Figure 9-2), if necessary, to match proper position for desired voltage (shown in Figure 9-1). Replace cover.

5. If the generator set is equipped with the overvoltage kit, verify correct use of the J1 jumper on the overvoltage circuit board . Install the J1 jumper if the generator set is connected for 139/240 (low wye) or 277/480 volts (high wye) 3-phase, 4-wire, 60 Hz. Remove the J1 jumper for all other voltages. Replace controller cover.

6. Turn the phase selector switch to the L1-L2 position (1-phase or 3-phase depending on generator connection) if the controller is equipped with meters. Connect a voltmeter across leads L1 and L2 if the controller is not equipped with meters.

NOTE

High voltage may damage equipment. Be sure that line circuit breakers, transfer switch(es), and any other accessories using line voltage are sized for the voltage selected.

7. Reconnect starting battery, negative lead last. Move generator master switch to the RUN position to start the generator set. Check voltmeter for proper voltage. Adjust voltage if necessary with the voltage adjustment potentiometer on the generator controller front panel or switchgear. See Figure 9-3. STOP generator set when adjustment is complete.

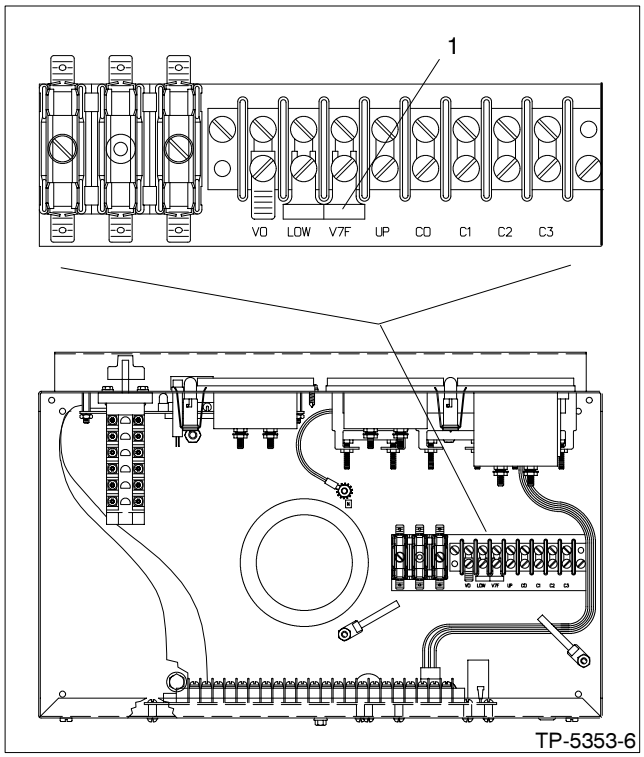

1. Lamp Jumper

Figure 9-2. Meter Scale Lamp Jumper

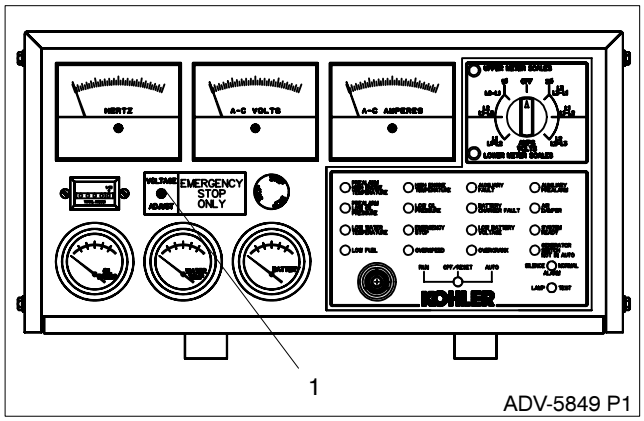

1. Voltage Adjustment

Figure 9-3. Voltage Adjustment

Generator Frequency Change and Adjustment

Frequency Change

Set the voltage regulator circuit board for either 50 or 60 Hz application. See Figure 9-4. Connect a jumper between terminals T1 and T2 for 60 Hz operation. Connect a jumper between terminals T1 and T3 to convert voltage regulator circuit board to 50 Hz application.

This procedure changes the voltage regulator circuit board for the desired frequency. See Frequency Adjustment for changing generator set frequency and speed.

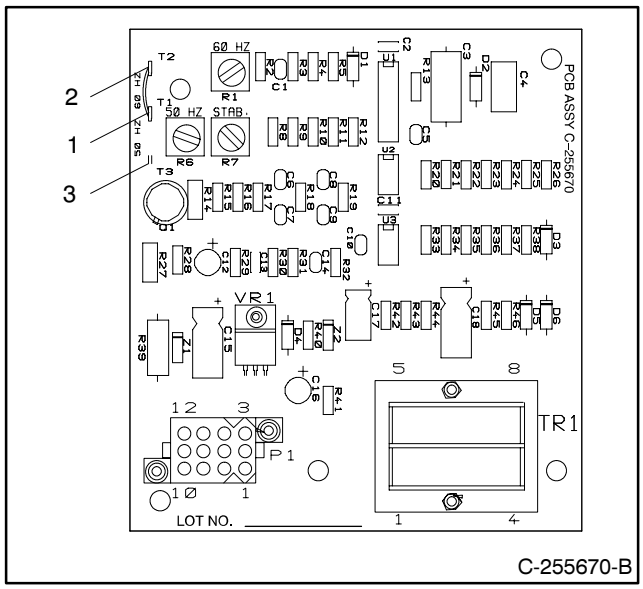

1. T1 Terminal
2. T2 Terminal
3. T3 Terminal

Figure 9-4. Jumper Location for 50 or 60 Hz Operation

Frequency Adjustment

Check the frequency meter for a no-load reading of 63 Hz for 60 Hz operation and 53 Hz for 50 Hz operation to determine correct frequency operation. Check for 50 and 60 Hz operation at no load if the generator set is equipped with an isochronous governor. Connect a frequency meter across V0 and V7 on the control board terminal strip (generator set must not be running while making connections) if the controller is not equipped with a frequency meter. Refer to Figure 9-5.

To adjust governor speed, refer to Section 7—Component Testing and Adjustment, Governors.

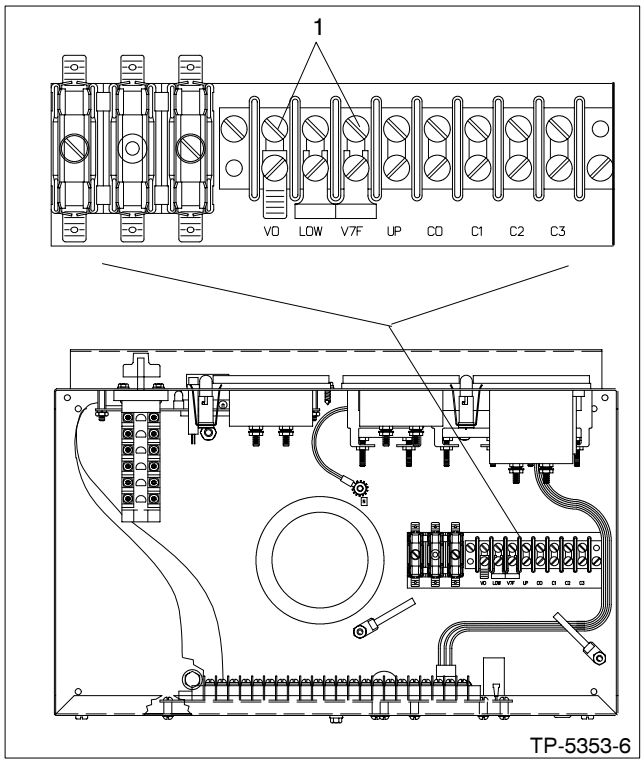

1. Frequency Meter Connection Points

Figure 9-5. Frequency Meter Connections

Appendix A. Glossary of Abbreviations

Abbreviations are used throughout this manual. Normally they will appear in the text in complete form with the abbreviation following in parentheses the first time they are used. After that they will appear in the abbreviated form. The commonly used abbreviations are shown below. Some items may not apply to this application.

Abbreviation	Description
ABDC	after bottom dead center
AC	alternating current
AISI	American Iron and Steel Institute
AHWT	anticipatory high water temp.
ALOP	anticipatory low oil pressure
AM	amplitude modulation
amp	ampere
amps	amperes
ANSI	American National Standard Institute
API	American Petroleum Institute
approx.	approximate, approximately
A/R	as required, as requested
A/S	as supplied, as stated, as suggested
ASA	American Standards Association (former name of ANSI)
ASME	American Society of Mechanical Engineers
assy.	assembly
ASTM	American Society for Testing Materials
ATDC	after dead top center
aux.	auxiliary
A/V	audio-visual
AWG	American Wire Gage
AWM	appliance wiring material
BBDC	before bottom dead center
BDC	before dead center
BHP	brake horsepower
bmep	brake mean effective power
BTDC	before top dead center
Btu	British thermal unit
°C	Celsius degree
cc	cubic centimeter
CCA	cold cranking amps
CEC	Canadian Electrical Code
cfh	cubic feet per hour
cfm	cubic feet per minute
CID	cubic inch displacement
cm	centimeter, centimeters
cmm	cubic meters per minute
co.	company
cont'd.	continued
CPVC	chloropoly vinyl chloride
CRT	cathode ray tube
CSA	Canadian Standards Association
CT	current transformer
cu. in.	cubic inch (es)

Abbreviation	Description
CWC	city-water cooled
cyl.	cylinder
dB	decibel
dBA	decibels (A weighted)
DC	direct current
DCR	direct current resistance
deg.	degree
dept.	department
dia.	diameter
DIN	Deutsches Institut fur Normung e. V. (also Deutsche Industrie Normenausschuss)
e.g.	example given
EIA	Electronic Industries Association
EMI	electromagnetic interference
EPA	Environmental Protection Agency
etc.	etcetera, (and so forth)
ext.	external
°F	Fahrenheit degree
fl. oz.	fluid ounce(s)
FM	frequency modulation
ft.	foot, feet
ft. lbs.	foot pound(s)
fs	full scale
ga.	gauge (meters wire size)
gal./gals.	gallon, gallons
gph	gallons per hour
gpm	gallons per minute
gr.	grade
grd.	ground
HCHT	high cylinder head temperature
HET	high exhaust temperature
Hg.	mercury (element)
H_2O	water
HP	horsepower
hr, hrs	hour, hours
HWT	high water temperature
Hz	hertz (cycles per second)
ID	inside diameter
IEEE	Institute of Electrical and Electronic Engineers
in.	inch, inches
inc.	incorporated
in. lbs.	inch pounds
int.	internal
int.-ext.	internal-external

Abbreviation	Description
ISO	International Standards Organization
J	joule, joules
JIS	Japanese Industry Standard
kg	kilogram, kilograms
kg/cm^2	kilograms per square centimeter
kgm	kilogram meter(s)
kJ	kilojoules (btu cal)
km	kilometer, kilometers
kPa	kiloPascal, kiloPascals
kph	kilometers per hour
kV	kilovolt
kVA	kilovolt amperes
kW	kilowatt, kilowatts
kWH	kilowatt hour
L	liter, liters
LxWxH	length x width x height
LED(s)	light emitting diode(s)
lb., lbs.	pound, pounds
L/hr.	liter per hour, liters per hour
L/min.	liter(s) per minute
LOP	low oil pressure
LP	liquified petroleum
LWT	low water temperature
m	meter, meters
m^3	cubic meter, cubic meters
max.	maximum
MCM	one thousand circular mils.
meggar	megohmmeter
MHz	megahertz
mi.	mile, miles
mil	one one-thousandth of an inch
min.	minimum
misc.	miscellaneous
mJ	milli joule(s)
MJ	mega joule(s)
mm	millimeter
m^3/min	cubic meters per minute
MPa	megaPascal
mpg	miles per gallon
mph	miles per hour
MS	military standard
mW	milliwatt(s)
MW	megawatt(s)
N/A	not available
NBS	National Bureau of Standards
N.C.	normally closed
NEC	National Electrical Code
NEMA	National Electrical Manufacturers Association
NFPA	National Fire Protection Association
Nm	Newton meter(s)
N.O.	normally open

Abbreviation	Description
no., nos.	number, numbers
NPT	National Standard taper pipe thread per general use
N/R	not required
OC	overcrank
OD	outside diameter
OEM	original equipment manufacturer
OS	overspeed
O/S	oversize
OSHA	Occupational Safety and Health Act
OV	overvoltage
oz.	ounce, ounces
PF	power factor
PMG	permanent magnet generator
pot	potentiometer
ppm	parts per million
psi	pounds per square inch
pt., pts.	pint, pints
PVC	polyvinyl chloride
qt., qts.	quart, quarts
qty.	quantity
ref.	reference
RFI	radio frequency interference
r.h.m.	round-head machine (screw)
rms	root means square
RPM	revolutions per minute
RTV	room temperature vulcanization
SAE	Society of Automotive Engineers
SCR	silicon controlled rectifier
sec.	second, seconds
spec, specs	specification
sq.	square
sq. cm.	square centimeters
sq. in.	square inch(es)
tach	tachometer
TDC	top dead center
tech. pub.	technical publications
temp.	temperature
TIF	telephone influence factor
TP, TPs	technical publications
turbo	turbocharger
UHF	ultrahigh frequency
UNC	Unified coarse thread (was NC)
UNF	Unified fine thread (was NF)
UL	Underwriter's Laboratories, Inc.
U/S	undersize
U.S.A.	United States of America
V	volt, volts
vac	volts alternating current
vdc	volts direct current
VHF	very high frequency
W	watt, watts

Appendix B. Common Hardware Application Guidelines

Many parts catalogs and service manuals will contain common hardware entries and hardware references instead of part numbers for common hardware.

This information gives common hardware application guidelines. Use the information below and on the following pages to identify proper fastening techniques when no specific reference for reassembly is made.

Bolt/Screw Length: When bolt/screw length is not given, use Figure B-1 as a guide. As a general rule, a minimum length of one thread beyond the nut and a maximum length of 1/2 the bolt/screw diameter beyond the nut is the preferred size.

Split Lock Washers: Split lock washers are no longer used as locking devices. For hardware up to 1/2 in. diameter a whiz nut (serrated flange) is used. The locking method used for hardware above 1/2 in. diameter will be SAE flat washers with preloading (torque) of the bolt/screw. See General Torque Specifications and other torque specifications in the service literature.

Common Hardware Entries: When hardware size (diameter and threads per inch) is given but no indication of type of additional hardware is shown, use the illustration in Figure B-2 as a guide.

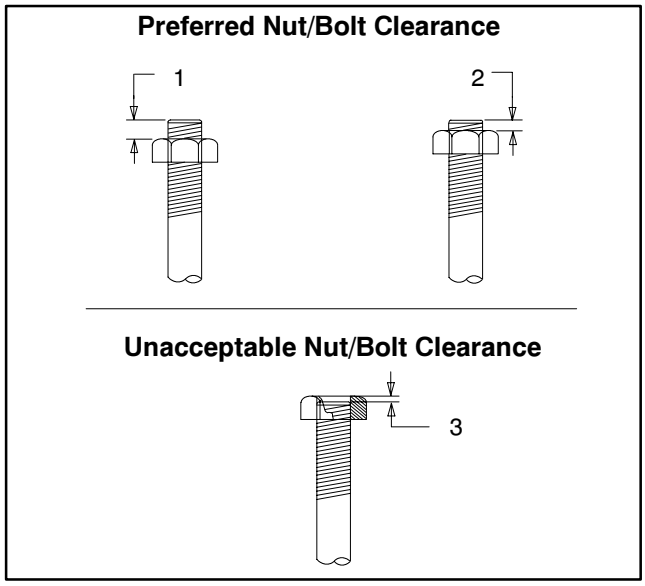

1. 1/2 in. bolt diameter
2. Min. 1 full thread beyond top of nut
3. Below top of nut

Figure B-1. Acceptable Bolt Lengths

Steps for common hardware application:

1. Determine entry hole type: round or slotted.
2. Determine exit hole type: fixed female thread (weld nut), round, or slotted. For round and slotted exit holes, determine if hardware is greater than 1/2 inch in diameter, or 1/2 inch in diameter or less. Hardware that is *greater than 1/2 inch* in diameter takes a standard nut and SAE washer. Hardware *1/2 inch or less* in diameter uses a properly torqued whiz nut. See Figure B-2.
3. Follow these SAE washer rules after determining exit hole type:
   a. Always use a washer between hardware and a slot.
   b. Always use a washer under a nut (see Step 2 above for exception).
   c. Use a washer under a bolt when the female thread is fixed (weld nut).
4. Refer to the diagram below, which depicts the preceding hardware configuration possibilities.

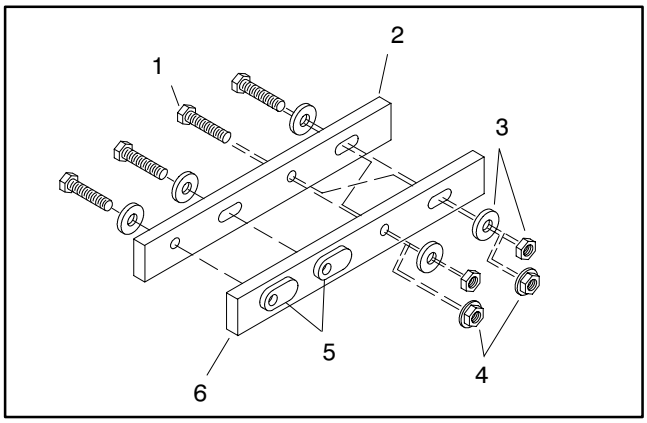

1. Cap screw
2. Entry hole types
3. Standard nut and SAE washer: greater than 1/2 in. dia. hardware
4. Whiz nut: up to and including 1/2 in. dia. hardware
5. Weld nuts
6. Exit hole types

Figure B-2. Acceptable Hardware Combinations

Appendix C. Common Hardware Identification

Common hardware has many different head, drive, and grade (hardness) styles. Some of the more common types are shown in Figure C-1 and Figure C-2. This is a guide for identification purposes. Not all generator hardware used is shown.

Screws/Bolts/Studs

HEAD STYLES

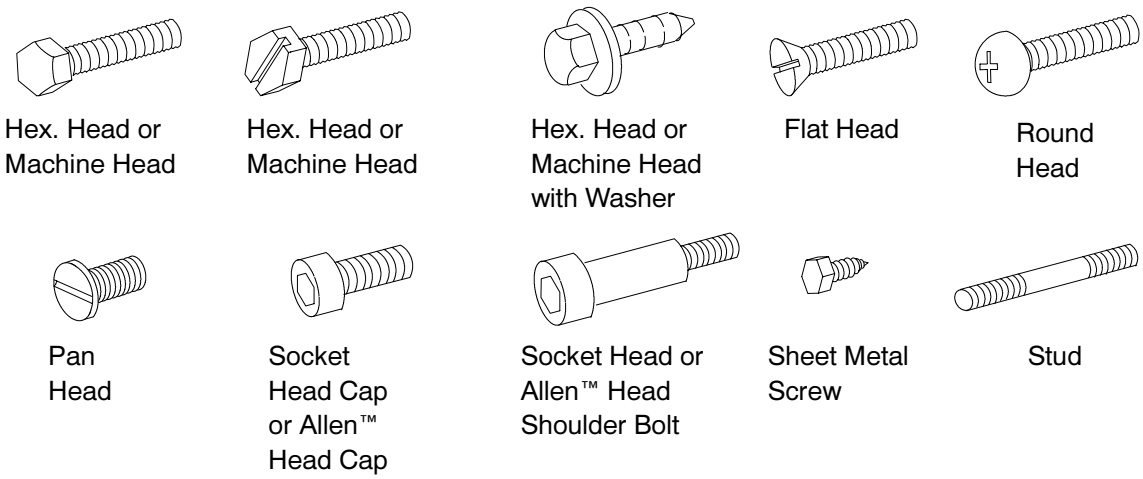

DRIVE STYLES

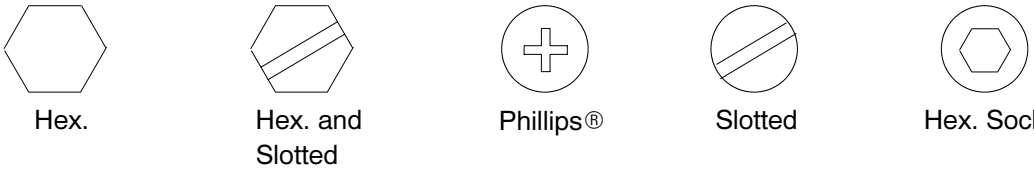

GRADE (HARDNESS)

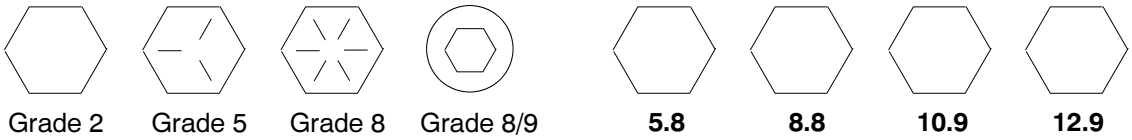

SAMPLE DIMENSIONS

American Standard

1/4-20 x 1

Major Thread Diameter In Fractional Inches Or Screw Number Size — 1/4

Threads Per Inch — 20

Length In Inches — 1

Metric

M8-1.25 x 20

Major Thread Diameter In Millimeters — M8

Distance Between Threads In Millimeters — 1.25

Length In Millimeters — 20

Allen™ is a trademark of Holo-Krome Co.
Phillips® is a registered trademark of the Phillips Screw Company.

Figure C-1. Screws/Bolts/Studs

Nuts

STYLES

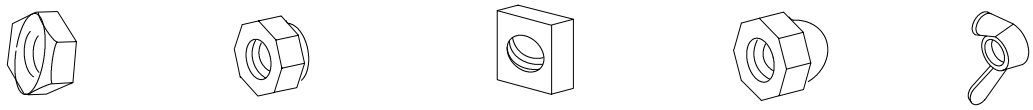

Hex. Head | Lock Nut or Nylock Nut | Square Nut | Cap Nut or Acorn Nut | Wing Nut

GRADE (HARDNESS)

American Standard

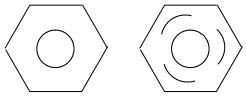

Grade 2 | Grade 5

Metric

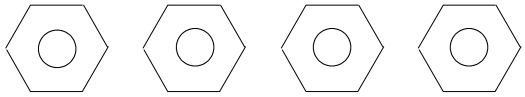

5.8 | 8.8 | 10.9 | 12.9

SAMPLE DIMENSIONS

American Standard

1/4-20

Major Thread Diameter In Fractional Inches Or Screw Number Size — Threads Per Inch

Metric

M8-1.25

Major Thread Diameter In Millimeters — Distance Between Threads In Millimeters

Washers

STYLES

Plain Washer | Split Lock Washer or Spring Washer | Spring Washer or Wave Washer | External Tooth Lock Washer | Internal Tooth Lock Washer | Internal-External Tooth Lock Washer

GRADE (HARDNESS)

There is no marking to identify hardness. Usually hardened washers have a black oxide or black phosphate finish rather than a zinc (silver-colored) finish.

SAMPLE DIMENSIONS

Plain Washers

9/32 x 5/8 x 1/16

Internal Dimension — External Dimension — Thickness

Lock Washers

5/8

Internal Dimension

Figure C-2. Nuts/Washers

Appendix D. General Torque Specifications

Use the following specifications for American Standard fasteners when no torque values are given elsewhere in this manual for a specified bolt. The values are based on new plated threads. Increase values by 20% if non-plated threads are used. Screws threaded into aluminum must have two diameters of threads engaged and may require 30% or more reduction in the torque.

American Standard

Size	Measurement	Assembled in Cast Iron or Steel			Assembled in Aluminum
		Grade 2	Grade 5	Grade 8	Grade 2 or 5
8-32	in. lbs. (Nm)	16 (2)	20 (2.3)	–	16 (1.8)
10-24	in. lbs. (Nm)	26 (3)	32 (3.6)	–	26 (2.9)
10-32	in. lbs. (Nm)	26 (3)	32 (3.6)	–	26 (2.9)
1/4-20	in. lbs. (Nm)	60 (7)	96 (10.8)	132 (14.9)	60 (6.8)
1/4-28	in. lbs. (Nm)	72 (8)	108 (12.2)	144 (16.3)	72 (8.1)
5/16-18	in. lbs. (Nm)	120 (14)	192 (21.7)	264 (29.8)	120 (13.6)
5/16-24	in. lbs. (Nm)	132 (15)	204 (23.1)	288 (32.5)	132 (14.9)
3/8-16	ft. lbs. (Nm)	18 (24)	28 (38)	39 (53)	18 (24)
3/8-24	ft. lbs. (Nm)	20 (27)	31 (42)	44 (60)	20 (27)
7/16-14	ft. lbs. (Nm)	29 (39)	44 (60)	63 (85)	
7/16-20	ft. lbs. (Nm)	32 (43)	50 (68)	70 (95)	
1/2-13	ft. lbs. (Nm)	44 (60)	68 (92)	96 (130)	
1/2-20	ft. lbs. (Nm)	49 (66)	76 (103)	108 (146)	
9/16-12	ft. lbs. (Nm)	60 (81)	98 (133)	138 (187)	
9/16-18	ft. lbs. (Nm)	67 (91)	108 (148)	154 (209)	
5/8-11	ft. lbs. (Nm)	83 (113)	135 (183)	191 (259)	
5/8-18	ft. lbs. (Nm)	94 (128)	153 (208)	216 (293)	
3/4-10	ft. lbs. (Nm)	147 (199)	240 (325)	338 (458)	
3/4-16	ft. lbs. (Nm)	164 (222)	268 (363)	378 (513)	
1-8	ft. lbs. (Nm)	191 (259)	532 (721)	818 (1109)	
1-12	ft. lbs. (Nm)	209 (283)	582 (789)	895 (1214)	

Metric

Size (mm)	Measurement	Assembled in Cast Iron or Steel			Assembled in Aluminum
		5.8	8.8	10.9	
6 x 1.00	ft. lbs. (Nm)	5 (7)	6 (9)	9 (12)	5 (7)
8 x 1.25	ft. lbs. (Nm)	14 (19)	14 (20)	20 (37)	14 (19)
8 x 1.00	ft. lbs. (Nm)	16 (21)	17 (24)	23 (31)	16 (21)
10 x 1.50	ft. lbs. (Nm)	25 (35)	27 (37)	38 (51)	25 (35)
10 x 1.25	ft. lbs. (Nm)	29 (39)	34 (46)	45 (61)	29 (39)
12 x 1.75	ft. lbs. (Nm)	42 (57)	45 (61)	65 (89)	
12 x 1.50	ft. lbs. (Nm)	48 (65)	55 (75)	78 (106)	
14 x 2.00	ft. lbs. (Nm)	64 (86)	69 (94)	101 (137)	
14 x 1.50	ft. lbs. (Nm)	74 (100)	81 (110)	116 (157)	
16 x 2.00	ft. lbs. (Nm)	98 (133)	104 (141)	150 (204)	
16 x 1.50	ft. lbs. (Nm)	104 (141)	116 (157)	168 (228)	
18 x 2.50	ft. lbs. (Nm)	133 (181)	145 (196)	208 (283)	
18 x 1.50	ft. lbs. (Nm)	145 (196)	156 (212)	226 (306)	

KOHLER®
POWER SYSTEMS

KOHLER CO. Kohler, Wisconsin 53044
Phone 920-565-3381, Web site www.kohlergenerators.com
Fax 920-459-1646 (U.S.A. Sales), Fax 920-459-1614 (International)
For the nearest sales and service outlet in U.S.A. and Canada
Phone 1-800-544-2444

Kohler Power Systems
Asia Pacific Headquarters
7 Jurong Pier Road
Singapore 619159
Phone (65)264-6422, Fax (65)264-6455

TP-5353 8/94c